Design instructions of Kerto-Ripa® Elements

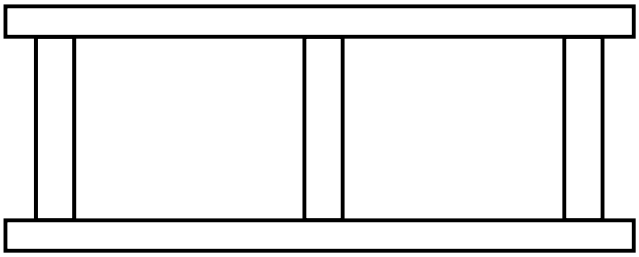

These design instructions are the property of Metsäliitto Cooperative, Metsä Wood. The instructions have been prepared in co-operation with VTT.

Revisions

The European Technical Approval ETA -07/0029 presupposes that the approval holder, Metsäliitto Cooperative, Metsä Wood, Kerto, provides the structural engineer with design instructions of the Kerto-Ripa® elements. These instructions refer to the ETA approval dated 31.8.2012. All updates made to the design instructions and calculation methods presented in this document shall be approved by VTT Expert Services Ltd (VTT).

The first version of the design instructions has been dated 14.6.2006. Revisions will be made whenever needed.

Version	Date of revision	Approved by VTT
1.	14.6.2006	14.6.2006
2.	16.6.2008	18.6.2008
3.	02.02.2010	02.02.2010 (Section A)
4.	19.06.2012	20.06.2012 (Section A)
5.	01.11.2012	01.11.2012
6.	23.04.2013	27.05.2013
7.	29.5.2015	1.6.2015
8.	4.3.2016	4.3.2016
9.	25.5.2016	26.5.2016

The different sections of these design instructions have been revised as follows.

Section	First time included	Date of revision
Product	14.6.2006	27.09.2012
A. Design of Kerto-Ripa elements		
1	14.6.2006	26.05.2008 15.01.2010 29.5.2015
2	14.6.2006	28.05.2008 15.01.2010 15.06.2012
3	14.6.2006	26.05.2008 02.02.2010 18.06.2012
4	14.6.2006	26.05.2008 15.01.2010
5	14.6.2006	30.05.2008 15.01.2010

These design instructions are the property of Metsäliitto Cooperative, Metsä Wood. The instructions have been prepared in co-operation with VTT.

Section	First time included	Date of revision
6	14.6.2006	16.06.2008 02.02.2010 18.06.2012
7	14.6.2006	30.05.2008 15.01.2010
8	14.6.2006	26.05.2008 15.01.2010
9	14.6.2006	16.06.2008 15.01.2010 01.11.2012 4.3.2016
10	14.6.2006	16.06.2008 15.01.2010 01.11.2012 15.02.2013
11	14.6.2006	30.05.2008 15.01.2010 19.06.2012 23.04.2013 29.5.2015
B. Design example of Kerto-Ripa elements		
1	14.6.2006	27.9.2012
2	14.6.2006	27.9.2012
3	14.6.2006	27.9.2012
4	14.6.2006	27.9.2012
5	14.6.2006	01.11.2012 4.3.2016
6	14.6.2006	01.11.2012

These design instructions are the property of Metsäliitto Cooperative, Metsä Wood. The instructions have been prepared in co-operation with VTT.

Section	First time included	Date of revision
C. Top slab supported Kerto-Ripa elements		
1	14.6.2006	13.1.2010 01.11.2012 29.5.2015
2	14.6.2006	13.1.2010 27.9.2012
3	14.6.2006	13.1.2010 01.11.2012 29.5.2015 25.5.2016
4	14.6.2006	13.1.2010 27.9.2012 29.5.2015 4.3.2016
D. Support reinforced Kerto-Ripa elements		
1	4.3.2016	
2	4.3.2016	
3	4.3.2016	
4	4.3.2016	
5	4.3.2016	

These design instructions are the property of Metsäliitto Cooperative, Metsä Wood. The instructions have been prepared in co-operation with VTT.

Contents

Revisions 2
Contents 5
Product 6
A. Design methods of Kerto-Ripa elements 8
1 Application area of these instructions 8
2 Calculation principles 8
3 Effective flange width b_{ef} 9
4 Effective bending stiffness EI_{ef} 13
5 Bending moment resistance $R_{M,k}$ 14
6 Shear resistance $R_{V,k}$ 17
7 Axial compression and tension resistance $R_{N,k}$ 20
8 Calculation of combined stresses 21
9 Compression perpendicular to grain at supports 21
9.1 Ribbed and thin slab method 22
9.2 Thick slab method 23
10 Vibration 26
10.1 Basic design principles 26
10.2 Deflection checking for vertical concentrated static force 27
10.3 Transverse stiffness 28
11 Structural details of Kerto-Ripa elements 30
11.1 Details at supports 30
11.2 Lifting points 31
11.3 Connections between two adjacent elements 31
11.4 Holes in ribs 32
B. Design example of Kerto-Ripa elements 33
1 General 33
2 Effective flange width b_{ef} and bending stiffness EI_{ef} 33
3 Bending moment capacity $R_{M,k}$ 35
4 Shear capacity $R_{V,k}$ 35
5 Compression perpendicular to grain on supports 36
6 Serviceability limit state design 37
6.1 Static deflections: 37
6.2 Vibration design 38
C. Top slab supported Kerto Ripa elements 40
1 Application area of this annex 40
2 Failure modes evaluated 42
3 Load bearing capacity 43
3.1 Slab shear capacity 43
3.2 Slab bending capacity 44
3.3 Rib shear capacity 45
3.4 Withdrawal capacity of anchoring screws 46
3.5 Pull-through capacity of anchoring screws 47
3.6 Capacity of inclined screws 49
4 Design example 52
D. Support reinforced Kerto-Ripa elements 57

These design instructions are the property of Metsäliitto Cooperative, Metsä Wood. The instructions have been prepared in co-operation with VTT.

1 Application area of this annex 57
2 Failure modes evaluated 58
3 Load bearing capacity 58
3.1 Reinforced compression capacity 58
3.2 Top level of reinforcement compression capacity 59
3.3 Glue line shear capacity 59
3.4 Web buckling capacity 60
4 Structural detailing 62
4.1 Blockings 62
4.2 Reinforcement piece 63
5 Design example 64

Product

These design instructions apply to Kerto-Ripa® elements, which are stressed skin panels made of Kerto® LVL material using one component polyurethane adhesive as presented in the ETA-07/0029. The adhesive is durable against weather. The pressure needed in the gluing process is obtained by screws or nails. The screws or nails do not act together with the glue bond, thus, they do not carry the shear loads between the web and the flange. The flanges are glued to the webs as presented in Figure 1.

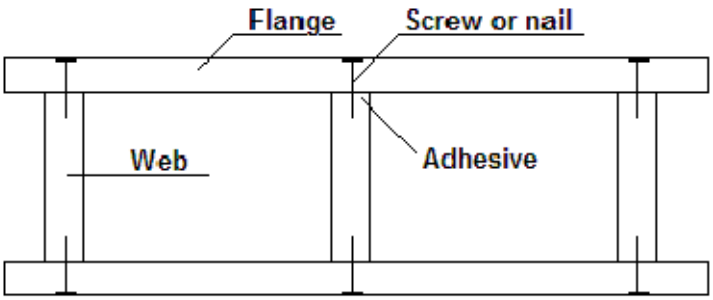

Figure 1. *An example cross-section of a Kerto-Ripa stressed skin panel.*

There are four types of Kerto-Ripa elements available:

- A Kerto-Ripa ribbed slab which consists of only one upper (i.e. top) slab, or one lower (i.e. bottom) slab. The latter case means that the ribbed slab is used upside down.

- A Kerto-Ripa box slab which has both top and bottom slabs.

These design instructions are the property of Metsäliitto Cooperative, Metsä Wood. The instructions have been prepared in co-operation with VTT.

- A Kerto-Ripa open box slab which is similar to the Kerto-Ripa box slab but has a discontinuous lower slab. The lower slab can be centrally or noncentrally positioned in respect of the web.

- A Kerto-Ripa box slab where the top panel is not a part of the composite cross section

Kerto-S is used as the web material and Kerto-Q as the flange material of the elements. An exception to this is the Kerto-Ripa open box slab which has lower flange made of Kerto-S. Plywood can be used as top or bottom panel for load distribution.

The terms “ribs” and “slabs” are used in these instructions for Kerto-S webs, and Kerto-Q or Kerto-S flanges, respectively.

All surfaces of the slabs, which are glued to the ribs, must always be sanded. The sanding is done on one or on both sides of the Kerto slabs so that the nominal thickness is reduced by 1 mm per side.

As a default, slabs should be done using a single continuous plate. Slab may have joints with the following conditions:

- There shall be a supporting piece align with the joint

- The capacity of the Kerto-Ripa -element shall be checked at the location of the joint. If the capacity of the cross-section excluding the jointed slab is sufficient, the joint may be done using the general Kerto-Ripa assembly tolerances.

- If the capacity is not sufficient the plates shall be installed into contact allowing slab end angle. The joint shall be positioned so that there will be no tension stress present considering all load cases.

These design instructions are the property of Metsäliitto Cooperative, Metsä Wood. The instructions have been prepared in co-operation with VTT.

A. Design methods of Kerto-Ripa elements

1 Application area of these instructions

This document presents the design methods of Kerto-Ripa elements defined in the ETA-07/0029. The design methods are based on the standard EN1995-1-1:2004+AC:2006+A1:2008+A2:2014 (EC 5) and general principles of structural mechanics.

2 Calculation principles

According to the ETA-07/0029, the design calculations of Kerto-Ripa elements should be made by using the sanded thicknesses of the slabs.

The slabs of Kerto-Ripa elements are connected to the ribs by gluing. Thus, the slip between the slab and the rib is assumed to be zero. In addition, the theory of the thin-flanged beams presented in the EC 5 standard is used.

The structural checking of the Kerto-Ripa element comprises of separate design checkings of each rib and its effective cross-section in the longitudinal direction of the element. The design criteria of these calculations are presented in the Chapters 3 to 10 of the Section A of this document.

The bending stiffness of each effective cross-section of the element is calculated according to the effective flange width $b_{ef,}$. The parameter b_{ef} is calculated in each span according to the effective span length L_{ef}. With continuous elements, L_{ef} is assumed to be the same as $L_{i,}$ as presented in Figure A1.

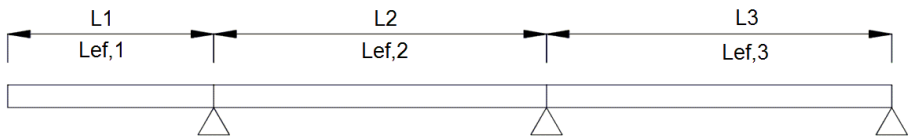

Figure A1. *Span lengths L_i and effective span lengths $L_{ef,i}$ of a continuous Kerto-Ripa element.*

These design instructions are the property of Metsäliitto Cooperative, Metsä Wood. The instructions have been prepared in co-operation with VTT.

In addition to the checking of the ribs of the Kerto-Ripa element, the slabs of the element shall be checked for the bending and shear resistance, as well as for deflection. These checkings are not included in this document.

Optionally plywood plate can be used with Kerto-Ripa element. Plywood plate can act as lateral torsional buckling support for ribs but it shall not be included in the composite cross-section. Clearance between plywood plated needs to be big enough to allow moisture and compression deformation.

Nevertheless, the following assumptions shall be used:

1) The deflection of a structurally glued single-span plate can be reduced by 23 %, when the plate is simply supported, under uniformly distributed loading and the ribs are connected to each other at the opposite edge with spacing $c/c \leq 600$ mm. For multi-span plate reduction is not allowed.

2) When calculating the Kerto-Q plate in the transverse direction, the nominal thickness without sanding is used (for example 27 mm instead of 25 mm).

3) Shear deflection shall be taken into account in the deflection checking.

3 Effective flange width b_{ef}

In each Kerto-Ripa element, every I, T, Γ or C shaped effective cross-section located in the middle or in the edge of the element is separately checked in the design.

Deflection of Kerto-Ripa element in service limit state (SLS) shall be calculated for combined cross-section of one Kerto-Ripa element. The sum of effective bending stiffness from every I, T, Γ or C shaped section is used as effective bending stiffness.

The effective width b_{ef} of the compressed and tensile flange is calculated as follows:

$$b_{ef,i} = b_{L,i} + b_{w,i} + b_{R,i} \qquad \text{(A.1)}$$

where $b_{L,i}$ is the width of the flange on the left side of the web under checking and $b_{L,i} \leq 0{,}5 b_{f,i}$,

$b_{f,i}$ is the distance between adjacent webs of the element

These design instructions are the property of Metsäliitto Cooperative, Metsä Wood. The instructions have been prepared in co-operation with VTT.

$b_{w,i}$ is the width of the web under checking,

$b_{R,i}$ is the width of the flange on the right side of the web under checking and $b_{R,i} \leq 0{,}5 b_{f,i}$

See Figure A2 for parameters $b_{ef,i}$, $b_{L,i}$, $b_{f,i}$, $b_{w,i}$ and $b_{R,i}$.

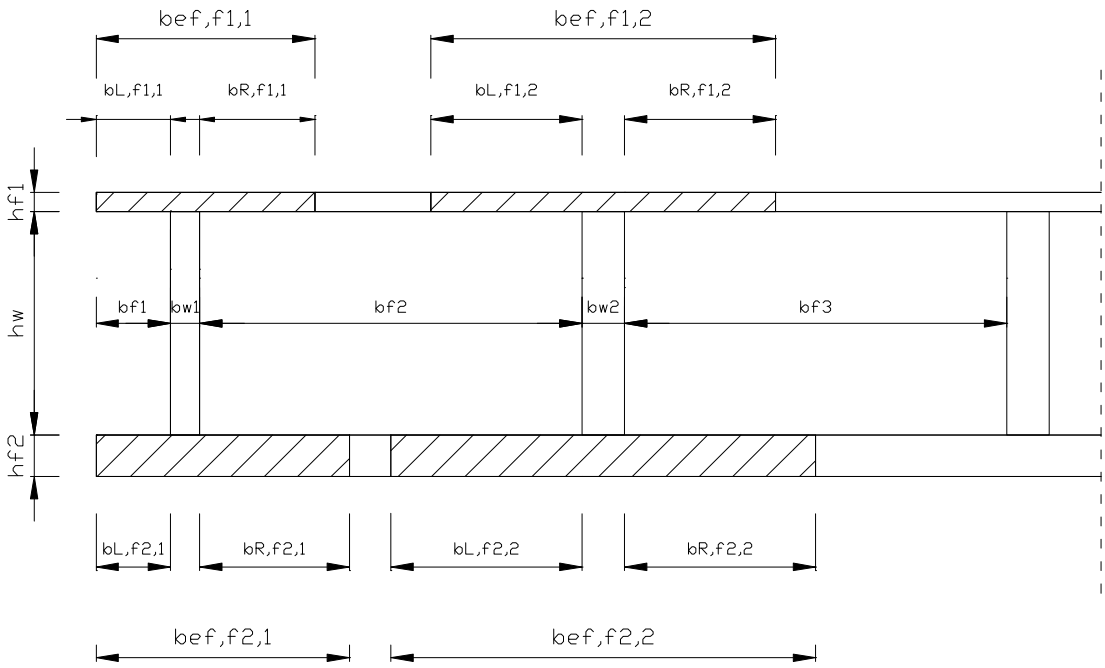

Figure A2. *Effective cross-sections of a Kerto-Ripa element and parameters used in the calculations.*

The parameters $b_{L,i}$ and $b_{R,i}$ are calculated in the serviceability limit state (SLS) as follows:

- With middle ribs

$$b_{L,SLS,i} \leq \min \begin{cases} 0{,}05 \cdot L_{ef} \\ \dfrac{b_{f,i}}{2} \end{cases} \quad \text{and} \quad b_{R,SLS,i} \leq \min \begin{cases} 0{,}05 \cdot L_{ef} \\ \dfrac{b_{f,i+1}}{2} \end{cases} \qquad \text{(A.2a)}$$

These design instructions are the property of Metsäliitto Cooperative, Metsä Wood. The instructions have been prepared in co-operation with VTT.

- With edge ribs

$$b_{L,SLS,i} \leq \min \begin{cases} 0{,}05 \cdot L_{ef} \\ b_{f,i} \end{cases} \text{ and } b_{R,SLS,i} \leq \min \begin{cases} 0{,}05 \cdot L_{ef} \\ b_{f,i+1} \end{cases} \qquad \text{(A.2b)}$$

In addition to the equations (A.2a) and (A.2b), Kerto-Ripa open box slabs need to fulfil the following criteria:

- With middle ribs and edge ribs

$$b_{L,SLS,i} \leq b_{actual,i} - b_{w,i} - b_{R,SLS,i} \qquad \text{(A.2c)}$$

and

$$b_{R,SLS,i} \leq b_{actual,i} - b_{w,i} - b_{L,SLS,i} \qquad \text{(A.2d)}$$

where $b_{actual,i}$ is the actual width of the bottom flange under checking. See Figure A3 for parameters of the Kerto-Ripa open box slab.

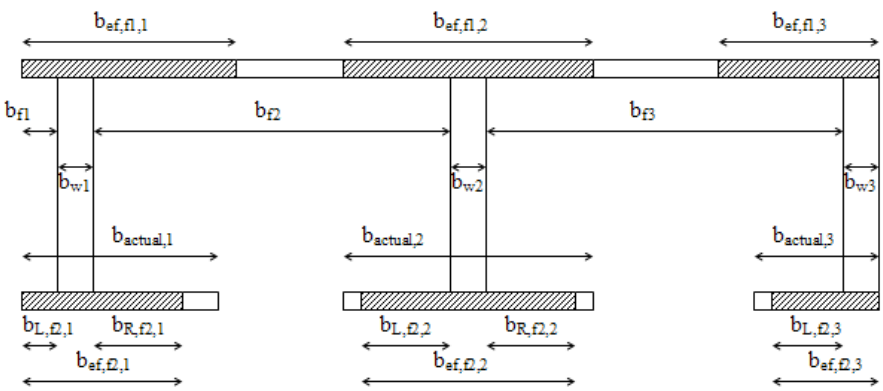

Figure A3. *Effective cross-sections of a Kerto-Ripa open box element and parameters used in the calculations.*

These design instructions are the property of Metsäliitto Cooperative, Metsä Wood. The instructions have been prepared in co-operation with VTT.

In the ultimate limit state (ULS), the parameters $b_{L,i}$ and $b_{R,i}$ are calculated as follows:

- With middle ribs

$$b_{L,ULS,i} \leq \min\begin{cases} 0{,}05 \cdot L_{ef} \\ 12 \cdot h_f \\ \dfrac{b_{f,i}}{2} \end{cases} \text{ and } b_{R,ULS,i} \leq \min\begin{cases} 0{,}05 \cdot L_{ef} \\ 12 \cdot h_f \\ \dfrac{b_{f,i+1}}{2} \end{cases} \qquad \text{(A.3a)}$$

- With edge ribs

$$b_{L,ULS,i} \leq \min\begin{cases} 0{,}05 \cdot L_{ef} \\ 12 \cdot h_f \\ b_{f,i} \end{cases} \text{ and } b_{R,ULS,i} \leq \min\begin{cases} 0{,}05 \cdot L_{ef} \\ 12 \cdot h_f \\ b_{f,i+1} \end{cases} \qquad \text{(A.3b)}$$

See Figure A2 for parameters $b_{f,i}$ and h_f, and Figure A1 for parameter L_{ef}.

In addition to the equations (A.3a) and (A.3b), Kerto-Ripa open box slabs need to fulfil the following criteria:

- With middle ribs and edge ribs

$$b_{L,ULS,i} \leq \min\begin{cases} 5h_f \\ b_{actual,i} - b_{w,i} - b_{R,ULS,i} \end{cases} \qquad \text{(A.3c)}$$

and

$$b_{R,ULS,i} \leq \min\begin{cases} 5h_f \\ b_{actual,i} - b_{w,i} - b_{L,ULS,i} \end{cases} \qquad \text{(A.3d)}$$

where $b_{actual,i}$ is the actual width of the bottom flange under checking. See Figure A3 for corresponding parameters.

These design instructions are the property of Metsäliitto Cooperative, Metsä Wood. The instructions have been prepared in co-operation with VTT.

Notes:

- At the edges of an element, the Kerto slab can have an offset so that it covers only part of the Kerto rib. An exception to this is the lower slab of a Kerto-Ripa open box slab which cannot have an offset.

- The top or bottom slabs can have different depths and, therefore, their effective widths need to be separately defined.

- For simplification of the calculations, the plate buckling criterion $(2 \cdot 12 \cdot h_f)$ is always used in the designing of both the top and bottom flanges. With Kerto-Ripa open box slabs, the maximum effective flange width of $(12 \cdot h_f)$ is used when checking the plate buckling criteria.

- The clear distance between the adjacent Kerto-S ribs is determined by the bending resistance, shear resistance and deflection of the Kerto-Q slab. The maximum allowed clearance between the adjacent ribs is 1250 mm.

- In addition to the plate buckling criterion, the free edge distance of Kerto-Q plate shall satisfy the following expression:

$$b_{f,i} \leq 20 h_f \tag{A.4a}$$

and for Kerto-S plate:

$$b_{f,i} \leq 10 h_f \tag{A.4b}$$

where h_f is the thickness of the flange under compression.

4 Effective bending stiffness EI_{ef}

The E_{mean} values of Kerto-S and Kerto-Q are used in both SLS and ULS design. In the SLS design, the creep is calculated in each load case by the factor $(1 + \psi_2 \cdot k_{def})$. In addition, the shear deformation of the web shall be included in the SLS design, however, it does not have to be taken into account in the vibration design.

The effective bending stiffness EI_{ef} of Kerto-Ripa elements is calculated as follows:

$$\begin{aligned} EI_{ef,box_slab_or_semi\text{-}box_slab} &= E_1 \cdot I_1 + E_2 \cdot I_2 + E_3 \cdot I_3 \\ &+ E_1 \cdot A_1 \cdot a_1^{\,2} + E_2 \cdot A_2 \cdot a_2^{\,2} + E_3 \cdot A_3 \cdot a_3^{\,2} \end{aligned} \tag{A.5}$$

These design instructions are the property of Metsäliitto Cooperative, Metsä Wood. The instructions have been prepared in co-operation with VTT.

$$EI_{ef,ribbed_slab} = E_1 \cdot I_1 + E_2 \cdot I_2 + E_1 \cdot A_1 \cdot a_1^2 + E_2 \cdot A_2 \cdot a_2^2 \text{ or} \quad \text{(A.6a)}$$

$$= E_2 \cdot I_2 + E_3 \cdot I_3 + E_2 \cdot A_2 \cdot a_2^2 + E_3 \cdot A_3 \cdot a_3^2 \quad \text{(A.6b)}$$

where:

E_i = Modulus of elasticity $E_{mean,i}$
A_i = Cross-section area of the member: $b_i \cdot h_i$
I_i = Moment of inertia: $b_i \cdot h_i^3/12$
b_1 = Effective width of the top slab ($b_{ef,f1}$)
b_2 = Width of the rib (b_w)
b_3 = Effective width of the bottom slab ($b_{ef,f2}$),
h_1 = Depth of the top slab (h_{f1})
h_2 = Depth of the web (h_w)
h_3 = Depth of the bottom slab (h_{f2})
a_i = Distance between the centre of gravity of the member and the neutral axis of the element
a_1 $= 0.5 \cdot h_1 + 0.5 \cdot h_2 - a_2$ (A.7)

$$a_{2,box_slab_or_open_box_slab} = \frac{E_1 \cdot A_1 \cdot (h_1 + h_2) - E_3 \cdot A_3 \cdot (h_2 + h_3)}{2 \cdot (E_1 \cdot A_1 + E_2 \cdot A_2 + E_3 \cdot A_3)} \quad \text{(A.8)}$$

$$a_{2,ribbed_slab} = \frac{E_1 \cdot A_1 \cdot (h_1 + h_2)}{2 \cdot (E_1 \cdot A_1 + E_2 \cdot A_2)} \text{ or} \quad \text{(A.9a)}$$

$$a_{2,ribbed_slab} = \frac{E_3 \cdot A_3 \cdot (h_3 + h_2)}{2 \cdot (E_3 \cdot A_3 + E_2 \cdot A_2)} \quad \text{(A.9b)}$$

a_3 $= 0.5 \cdot h_3 + 0.5 \cdot h_2 + a_2$ (A.10)

5 Bending moment resistance $R_{M,k}$

The bending moment resistance of a Kerto-Ripa element is taken as the minimum of the following cases. All material values presented in these equations shall be taken from the Table 1-2 of the ETA-07/0029.

These design instructions are the property of Metsäliitto Cooperative, Metsä Wood. The instructions have been prepared in co-operation with VTT.

- The bending moment resistance based on the mean compression stress in the middle of the flange:

$$R_{M,c,i,k} = f_{c,0,i,k} \cdot \left(\frac{EI_{ef,ULS}}{E_{mean,i} a_i} \right) \quad \text{(A.11)}$$

i=1 or 3, where 1=top slab and 3=bottom slab

- The bending moment resistance based on the mean tension stress in the middle of the flange:

$$R_{M,t,i,k} = f_{t,0,i,k} \cdot \left(\frac{EI_{ef,ULS}}{E_{mean,i} a_i} \right) \quad \text{(A.12)}$$

i=1 or 3, where 1=top slab and 3=bottom slab

Note: The tensile strength ($f_{t,0,k}$) shall be multiplied by the factor k_l, which is calculated as follows:

$$k_l = \min(1.1 , (3000/L_{ef})^{0.06} \quad \text{(A.13)}$$

- The bending moment resistance based on the axial edge stress of the web:

$$R_{M,m,2,k} = f_{m,2,k} \cdot \frac{EI_{ef,ULS}}{E_{mean,2} \cdot \left(|a_2| + \frac{h_2}{2} \right)} \quad \text{(A.14)}$$

Note: The bending moment strength ($f_{m,k,\|}$) shall be multiplied by the factor k_h, which is calculated as follows:

$$k_h = \min(1.2 , (300/h_i)^{0.12}) \quad \text{(A.15)}$$

Note: The free edges of webs under compression in a Kerto-Ripa ribbed slab must be checked for lateral torsional buckling in accordance with EC 5, clause 6.3.3, where

- The relative slenderness for bending is calculated by the equation (6.30) as follows

$$\lambda_{rel,m} = \sqrt{\frac{f_{m,w,k}}{\sigma_{m,crit}}}$$

These design instructions are the property of Metsäliitto Cooperative, Metsä Wood. The instructions have been prepared in co-operation with VTT.

where the lower index "*w*" refers to the web

- The critical bending stress for lateral stability is calculated by the equation (6.31) as follows

$$\sigma_{m,crit} = \frac{\pi \cdot \sqrt{EI_{z,ULS} \cdot GI_{tor}}}{L_{ef,w} \cdot W_y}$$

where the parameters $EI_{z,ULS}$, GI_{tor} and W_y are calculated as presented below

$$EI_{z,ULS} = E_{0.05,w} \cdot \frac{1}{12} \cdot h_w \cdot b_w^{\ 3} + E_{0.05,f} \cdot \frac{1}{12} \cdot h_f \cdot b_{ef,f}^{\ 3} \qquad \text{(A.16)}$$

$$GI_{tor} = G_{0.05,w} \cdot \frac{1}{3} \cdot h_w \cdot b_w^{\ 3} \cdot \left(1 - \frac{0.6 \cdot b_w}{h_w}\right)$$

$$+ G_{0.05,f} \cdot \frac{1}{3} \cdot b_{ef,f} \cdot h_f^{\ 3} \cdot \left(1 - \frac{0.6 \cdot h_f}{b_{ef,f}}\right) \qquad \text{(A.17)}$$

$$W_y = \frac{EI_{ef,ULS}}{E_{mean,2} \cdot \left(|a_2| + \frac{h_2}{2}\right)} \qquad \text{(A.18)}$$

where the lower index "*f*" refers to the top or bottom flange

- The k_{crit} factor is calculated by the equation (6.34) as follows

$$k_{crit} = \begin{cases} 1 & ,\lambda_{rel,m} \le 0.75 \\ 1.56 - 0.75 \cdot \lambda_{rel,m} & ,0.75 < \lambda_{rel,m} \le 1.4 \\ 1/\lambda_{rel,m}^{\ 2} & ,\lambda_{rel,m} > 1.4 \end{cases}$$

- The checking of resistances is done according to the equation (6.33) which can be presented as follows

$$R_{M,bucklingk} \le k_{crit} \cdot R_{M,m,2,k}$$

These design instructions are the property of Metsäliitto Cooperative, Metsä Wood. The instructions have been prepared in co-operation with VTT.

- The bending moment resistance based on the centric bending stress of the web:

$$R_{M,m,centric,k} = f_{m,k} \cdot \frac{EI_{ef,ULS}}{E_{mean,i} \cdot \left(\frac{h_i}{2}\right)} \qquad \text{(A.19)}$$

Note: $R_{M,m,centric,k}$ should be used in the calculations of combined stresses

When the webs of a Kerto-Ripa element are single tapered, the compression bending strength parallel to the tapered edge shall be reduced by the factor $k_{m,\alpha,c}$ as follows:

$$k_{m,\alpha,c} = \frac{1}{\sqrt{1 + \left(\frac{f_{m,k}}{1{,}5 \cdot f_{v,k}} \cdot \tan\alpha\right)^2 + \left(\frac{f_{m,k}}{f_{c,90,k}} \cdot \tan^2\alpha\right)^2}} \qquad \text{(A.20)}$$

When the webs of a Kerto-Ripa element are single tapered, the tension bending strength parallel to the tapered edge shall be reduced by the factor $k_{m,\alpha,t}$ as follows:

$$k_{m,\alpha,t} = \frac{1}{\sqrt{1 + \left(\frac{f_{m,k}}{0{,}75 \cdot f_{v,k}} \cdot \tan\alpha\right)^2 + \left(\frac{f_{m,k}}{f_{t,90,k}} \cdot \tan^2\alpha\right)^2}} \qquad \text{(A.21)}$$

Note: It is recommended to use tapering at the compression side, since the $f_{c,90,k}$ value of Kerto-S webs is significantly higher than the $f_{t,90,k}$ value.

6 Shear resistance $R_{V,k}$

The shear resistance of a Kerto-Ripa element is taken as the minimum of the following cases. All material values presented in these equations shall be taken from the Table 1-2 of the ETA-07/0029.

These design instructions are the property of Metsäliitto Cooperative, Metsä Wood. The instructions have been prepared in co-operation with VTT.

- The shear resistance based on the joint between the top slab and the web is calculated as follows:

$$R_{V,top,k} = \min\left[f_{v,0,flat,slab,k} \cdot \left(\frac{k_{gl} \cdot b_{2,eff,t} \cdot EI_{ef,ULS}}{E_{mean,f} \cdot A_1 \cdot a_1} \right); \right.$$

$$\left. f_{v,0,flat,S,k} \cdot \left(\frac{b_w \cdot EI_{ef,ULS}}{E_{mean,f} \cdot A_1 \cdot a_1} \right) \right] \qquad \text{(A.22)}$$

$b_{2,eff,t}$ = effective joint width between the top slab (*t*) and the web (*2*)

where $f_{v,0,flat,S,k}$ is the flatwise shear strength of longitudinal veneer (value of Kerto-S is used).

- The shear resistance based on the web:

$$R_{V,web,k} = f_{v,edge,web,k} \cdot \left(\frac{b_w \cdot EI_{ef,ULS}}{E_{mean,f} \cdot A_1 \cdot a_1 + \frac{E_{mean,w} \cdot b_w \cdot \left(\frac{h_w}{2} - a_2 \right)^2}{2}} \right) \qquad \text{(A.23)}$$

- The shear resistance in the joint between the bottom slab and the web:

$$R_{V,bottom,k} = \min\left[f_{v,0,flat,slab,k} \cdot \left(\frac{k_{gl} \cdot b_{2,eff,b} \cdot EI_{ef,ULS}}{E_{mean,f} \cdot A_3 \cdot a_3} \right); \right.$$

$$\left. f_{v,0,flat,S,k} \cdot \left(\frac{b_w \cdot EI_{ef,ULS}}{E_{mean,f} \cdot A_3 \cdot a_3} \right) \right] \qquad \text{(A.24)}$$

$b_{2,eff,b}$ = effective joint width between the bottom slab (*b*) and the web (*2*)

where $f_{v,0,flat,S,k}$ is the flatwise shear strength of longitudinal veneer (value of Kerto-S is used).

These design instructions are the property of Metsäliitto Cooperative, Metsä Wood. The instructions have been prepared in co-operation with VTT.

The effective joint width of equations (A.22) and (A.24) is calculated as follows:

- With middle ribs

$$b_{eff} = 0{,}7b + 30mm \qquad \text{(A.25a)}$$

where b_{eff} is the effective joint width ($b_{2,eff,t}$ or $b_{2,eff,b}$) (mm) and b is the contact width of the web (mm)

k_{gl} = 1,30

- With edge ribs

$$b_{eff} = \max[b;(0{,}7b + 15mm)] \qquad \text{(A.25b)}$$

where b is the actual contact width (mm)

k_{gl} = 1,15

The equation (A.25a) is also used with edge ribs where the top slab extends 25 mm or further over the external surface of the edge rib.

The equation (A.25b) is used with edge ribs where the top slab extends less than 25 mm over the external surface of the edge rib, or when the top slab has an offset and does not fully cover the edge rib.

With Kerto-S flanges of Kerto-Ripa open slabs, b_{eff} equals to b which is the actual contact width of the web and k_{gl} = 1,00.

Note: When the ribs of Kerto-Ripa ribbed slabs are designed as visible structures, glue stains should be avoided in the manufacturing of the elements. This is accomplished by adjusting the effective joint width ($b_{2,eff,t}$ or $b_{2,eff,b}$) so that it is made smaller than the width of the rib (b_w). In this case, longitudinal grooves are carved near the edges of the rib, and glue is applied between the grooves. Thus, the glue can expand to the grooves during the manufacturing process.

> Example: If the grooves are of 3×3 mm size, and the distance from the edge of the rib to the outer edge of the groove is 5 mm, the contact width is calculated as follows:
>
> b_w - 2×(5+3) mm = b_w – 16 mm.

These design instructions are the property of Metsäliitto Cooperative, Metsä Wood. The instructions have been prepared in co-operation with VTT.

Note: With continuous Kerto-Ripa elements, the shear force can be reduced close to the intermediate supports of the structure as follows:

- The shear force reduction is made to the shear force curve of the load combinations provided that the loads are acting on the opposite side of the structure than the support area.
- The shear force curve is disregarded within the distance of 0.9×H from the edge of the support. The distance of 0.9×H is used to eliminate the effect of the self-weight on the shear force curve. The parameter H is the height of the ribs of the Kerto-Ripa element.

7 Axial compression and tension resistance $R_{N,k}$

All material values presented in the following equations for axial compression and tension resistance shall be taken from the Table 1-2 of the ETA-07/0029.

- The axial tension resistance:

$$R_{T,i,k} = f_{t,0,i,k} \cdot \frac{\sum E_i A_i}{E_i} \qquad \text{(A.26)}$$

i=1-3, where 1=top slab, 2=web and 3=bottom slab

- The axial compression resistance:

$$R_{C,i,k} = f_{c,0,i,k} \cdot \frac{\sum E_i A_1}{E_i} \qquad \text{(A.27)}$$

i=1-3, where 1=top slab, 2=web and 3=bottom slab

The axial force N is assumed to act along the centre line of the effective cross-section. Additional bending moment due to the eccentricity of the axial force shall be separately checked.

These design instructions are the property of Metsäliitto Cooperative, Metsä Wood. The instructions have been prepared in co-operation with VTT.

8 Calculation of combined stresses

The following verification shall be done to the top and the bottom slab and to the web:

- The mean tension due to the axial tension and bending stresses, when the sum of the stresses is of tensile type:

$$\left|\frac{M_d}{R_{M,t,i,d}}+\frac{N_{T,d}}{R_{T,i,d}}\right|\leq 1{,}0 \qquad \text{(A.28)}$$

i=1-3, where 1=top slab, 2=web and 3=bottom slab

- The mean compression due to the axial compression and bending stresses, when the sum of stresses is of compression type:

$$\left|\frac{M_d}{R_{M,c,i,d}}+\frac{N_{C,d}}{R_{C,i,d}}\right|\leq 1{,}0 \qquad \text{(A.29)}$$

i=1-3, where 1=top slab, 2=web and 3=bottom slab

- The combined tension and bending stresses at the edge of the web:

$$\left|\frac{M_d}{R_{M,t,web,d}}+\frac{N_{T,d}}{R_{T,web,d}}\right|+\left|\frac{M_d}{R_{M,m,centric,d}}\right|\leq 1{,}0 \qquad \text{(A.30)}$$

- The combined compression and bending stresses at the edge of the web, when buckling must be prevented:

$$\left|\frac{M_d}{R_{M,c,web,d}}+\frac{N_{C,d}}{R_{C,web,d}}\right|^2+\left|\frac{M_d}{R_{M,m,centric,d}}\right|\leq 1{,}0 \qquad \text{(A.31)}$$

9 Compression perpendicular to grain at supports

The compression perpendicular to the grain is checked for the web and for the bottom slab with thickness greater than 51 mm at supports. Both the web and the bottom slab are regarded as rectangular cross-sections. The material values used in the following equations shall be taken from the Table 1-2 of the ETA-07/0029. The strength of the supporting material shall be separately checked. The support capacity may be increase with reinforcement pieces, see section D for more information.

These design instructions are the property of Metsäliitto Cooperative, Metsä Wood. The instructions have been prepared in co-operation with VTT.

9.1 Ribbed and thin slab method

This design method shall be used for Kerto-Ripa -elements with bottom slab not more than 51 mm thick. This method applies also with ribbed slab.

The resistance based on the stresses at the contact area between the web and the support:

$$R_{c,90,k} = k_{c,90,web,k} \cdot f_{c,90,k} \cdot b_w \cdot L_{ef,suppor} \qquad \text{(A.32)}$$

where

$k_{c,90,web,k}$ = 1.0 generally

On discrete supports for uniformly loads or for concentrated loads further away from the support than $2h_w$, the following values may be used:

= 1.2 if $L_{support} \leq 125$ mm

= 1.1 if $L_{support} > 125$ mm

b_w = width of the web

$L_{ef,support}$ = effective contact length parallel to the grain, obtained by increasing the actual contact length, $l = L_{support}$, at each side by 15 mm, but not more than a, l or $l_1/2$ as presented in EC 5, 6.1.5(1).

See Figure A4 for parameters b_w and $L_{support}$.

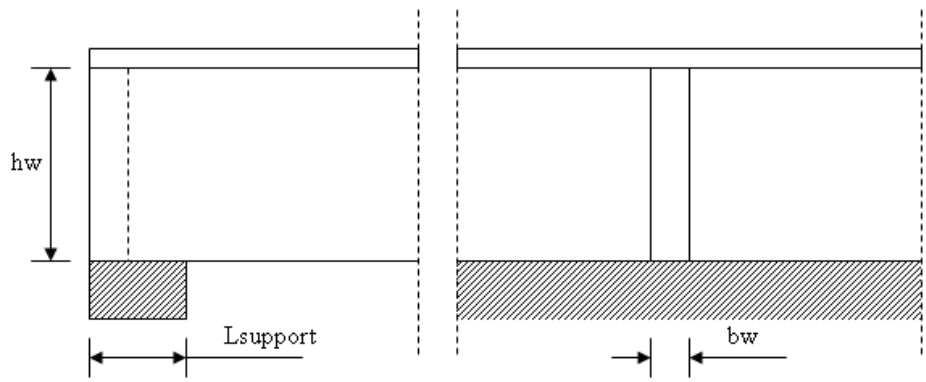

Figure A4. *Detail of a Kerto-Ripa ribbed slab at support.*

These design instructions are the property of Metsäliitto Cooperative, Metsä Wood. The instructions have been prepared in co-operation with VTT.

9.2 Thick slab method

This design method shall be used for Kerto-Ripa -elements with bottom slab more than 51 mm thick.

- The resistance based on the web:

$$R_{c,90,k} = k_{c,90} \cdot f_{c,90,web,k} \cdot b_w \cdot L_{ef,support} \quad \text{(A.33)}$$

where

$k_{c,90}$ = 1.0 generally

On discrete supports for uniformly loads or for concentrated loads further away from the support than $2h_w$, the following values may be used:

= 1.2 if $L_{support} \leq 125$ mm

= 1.1 if $L_{support} > 125$ mm

b_w = width of the web

$L_{ef,support}$ = effective contact length parallel to the grain, obtained by increasing the actual contact length, $l = L_{support}$, at each side by 15 mm, but not more than a, l or $l_1/2$ as presented in EC 5, 6.1.5(1).

See Figure A5 for parameters b_w, $L_{support}$ and $L_{ef,support}$.

- The resistance based on the bottom slab:

$$R_{c,90,k} = k_{c,90} \cdot f_{c,90,slab,k} \cdot b_{ef,\text{support}} \cdot L_{ef,support} \quad \text{(A.34)}$$

where

$k_{c,90}$ = 1.4

$b_{ef,support}$ is the effective contact width, which is calculated as follows:

- For edge webs

$$b_{ef,support} = b_w + 15mm \quad \text{(A.35a)}$$

where b_w is the width of the web (mm)

These design instructions are the property of Metsäliitto Cooperative, Metsä Wood. The instructions have been prepared in co-operation with VTT.

- For middle webs

$$b_{ef,support} = b_w + 2 \cdot 15mm \qquad \text{(A.35b)}$$

$L_{ef,support}$ is the effective support length, which is calculated as follows:

- At end supports

$$L_{ef,support} = L_{support} + 30mm + \min\begin{cases} a \\ 30mm \end{cases} \qquad \text{(A.36a)}$$

- At intermediate supports

$$L_{ef,support} = L_{support} + 2 \cdot 30mm \qquad \text{(A.36b)}$$

where

$L_{support}$ = length of the support, when blockings are used
= length of the support - a, when end beams are used

a = distance from the end of the web to the end of the flange

According to EC 5, 6.1.5.(1), $L_{support}$ (= l) shall not be increased more than by a, l or $l_1/2$ at each side.

The parameters of the equations (A.34), (A.35a), (A.35b), (A.36a) and (A.36b) are presented in Figures A.5, A.6 and A.7.

These design instructions are the property of Metsäliitto Cooperative, Metsä Wood. The instructions have been prepared in co-operation with VTT.

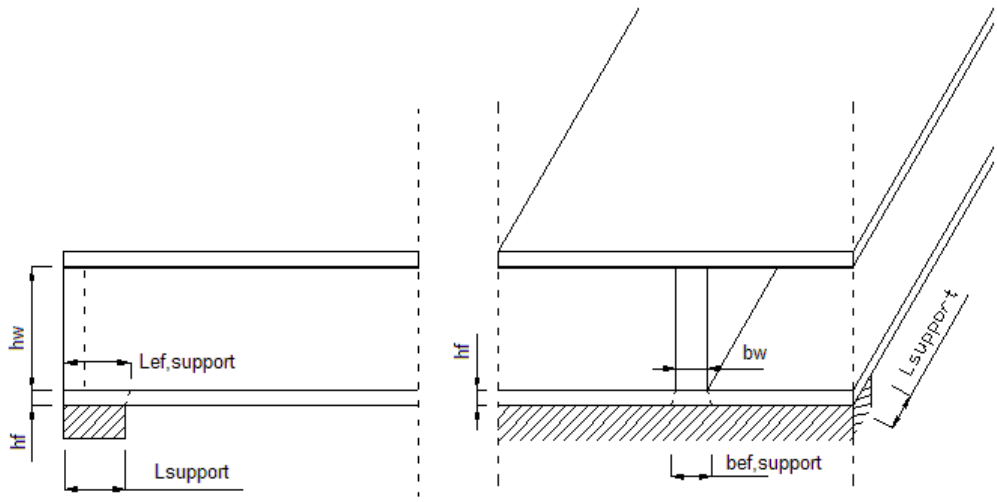

Figure A5. *Detail of a Kerto-Ripa box slab at support when blockings are used at the ends of the slab. Left: The effective length $L_{ef,support}$ of the contact area between the web and the bottom slab. Right: The effective width $b_{ef,support}$ of the contact area between the support and the bottom slab.*

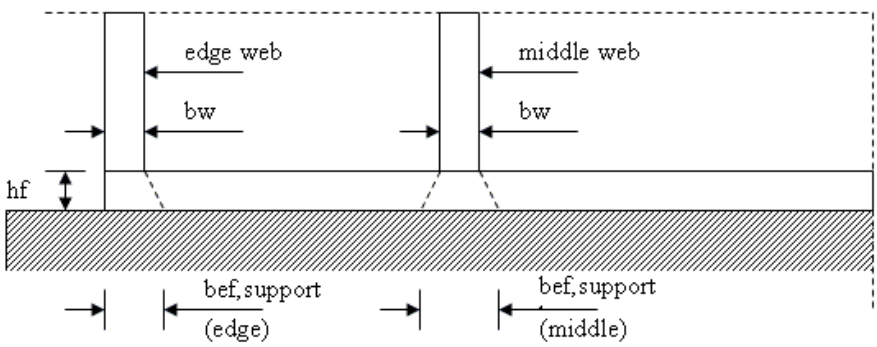

Figure A6. *The effective support width $b_{ef,support}$ for edge and middle webs of a Kerto-Ripa box slab, open box slab or ribbed slab upside down.*

These design instructions are the property of Metsäliitto Cooperative, Metsä Wood. The instructions have been prepared in co-operation with VTT.

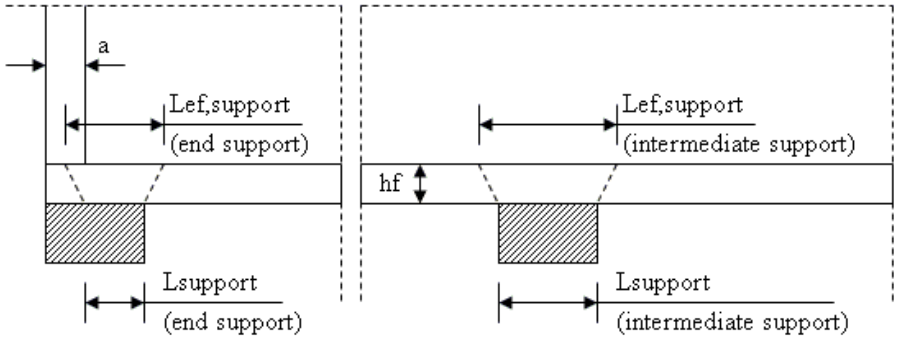

Figure A7. *The effective support length $L_{ef,support}$ at end supports and intermediate supports of a Kerto-Ripa box slab, open box slab or ribbed slab upside down.*

Note: The design checkings presented in the Chapters 9.1 and 9.2 are valid for cases where the loads from the Kerto-Ripa element are transferred to the supports by the contact area between the element and the support. Another option would be to utilize the end beam of the element in the support resistance, which means that the connection between the end beam and the webs of the element must be calculated to resist the full support reaction. As an example of this case, see the Chapter 3.6 "Top slab supported Kerto-Ripa elements" of Section C of this document. End beams are explained in the Chapter 11.1.

10 Vibration

The requirements for the vibration design of Kerto-Ripa elements are presented in the EC 5 standard and its National Annex.

10.1 Basic design principles

The vibration design of Kerto-Ripa elements is carried out according to the EC 5 and the clause 7.3.3 of the Finnish National Annex. The following principles are also applied:

- The E_{mean} values are used in the calculations.
- The shear deformation is not included in the checking.
- The vibration checking is done separately for each span of a continuous element. The span specific bending stiffnesses are defined in the Chapter 2 "Design methods of Kerto-Ripa elements" of Section A of this document.

These design instructions are the property of Metsäliitto Cooperative, Metsä Wood. The instructions have been prepared in co-operation with VTT.

10.2 Deflection checking for vertical concentrated static force

The value of the vertical concentrated static force F used in the deflection checking of Kerto-Ripa elements varies as follows:

- For an edge rib of an element at the free edge (no adjacent element), the concentrated force is taken as 0.5 kN

- For an edge rib of an element at the joint of two connected elements, the concentrated force is taken as 0.6 kN.

  This value is obtained by dividing the 1.0 kN force to the edge ribs of these two adjacent elements. Thus, $(EI)_{L2} = 2\times(EI)_{L1}$, where the lower index "L1" refers to the normal longitudinal stiffness of one edge rib, and the lower index "L2" to the total longitudinal stiffness of the two adjacent edge ribs. When this expression is substituted to the deflection equation of a load-bearing slab in two directions, the factor 0.6 is obtained as follows:

$$w_{L1} = \frac{F \cdot L^2}{42 \cdot k_\delta \cdot (EI)_{L1}}$$

$$w_{L2} = \frac{F \cdot L^2}{42 \cdot k_\delta \cdot (EI)_{L2}} = \frac{F \cdot L^2}{42 \cdot \sqrt[4]{(EI)_B/(EI)_{L2}} \cdot (EI)_{L2}}$$

$$= \frac{F \cdot L^2}{42 \cdot \sqrt[4]{(EI)_B/(2 \cdot (EI)_{L1})} \cdot 2 \cdot (EI)_{L1}}$$

$$= 0.595 \cdot \frac{F \cdot L^2}{42 \cdot \sqrt[4]{(EI)_B/(EI)_{L1}} \cdot (EI)_{L1}}$$

$$= 0.6 \cdot \frac{F \cdot L^2}{42 \cdot k_\delta \cdot (EI)_{L1}}$$

$$= 0.6 \cdot w_{L1}$$

- For a middle rib of an element, the concentrated force is taken as 1.0 kN

In addition, the local deflection of the slab caused by the vertical concentrated force F = 1.0 kN shall be checked for the requirements of the National Annex of the Eurocode 5 standard. In Finland, the requirement for deflection is 0.5 mm. This limit is fulfilled when $t \geq s$ / 25, where t is the thickness of the Kerto slab and s is the spacing of the Kerto ribs. For instance, the spacing of the ribs should be s < 600 mm when a 25 mm thick Kerto slab is used.

These design instructions are the property of Metsäliitto Cooperative, Metsä Wood. The instructions have been prepared in co-operation with VTT.

10.3 Transverse stiffness

The transverse stiffness EI_B (i.e. the stiffness perpendicular to the span direction) of the element is primarily calculated based on the EI_B of the slabs. Additional stiffness from blockings, floating floor, etc. is evaluated case by case. When blockings are used as transverse bracings, these are made of the same Kerto-S size as the ribs of the element. Further information on blockings is presented below in this chapter and in Chapter 11.1.

In Kerto-Ripa ribbed slabs, blockings are connected to the top slab of the element and to a tension chord (made of 22×100 sawn timber minimum) at the bottom of the element by nails 2.8×75 c/c 200 (minimum). The tension chord is also nailed to the ribs of the element with the same nails (2 nails 2.8×75 per rib).

In Kerto-Ripa open box slabs, blockings are connected to the top and bottom slabs of the element by nails 2.8×75 c/c 200 (minimum). The tension chord (made of 22×100 sawn timber minimum) is then connected to the bottom of the bottom slab at the ribs with the same nails (2 nails 2.8×75 per rib).

Due to the tension chords, adjacent Kerto-Ripa ribbed and open box slabs are connected to each other both at the top and at the bottom of the element. The joints of the tension chord must, however, not be located at the joints of the adjacent Kerto-Ripa slabs. See Chapter 11.3 for more information on connections between adjacent elements.

At the free edges of all Kerto-Ripa elements, the transverse stiffness of the slab(s) and additional blockings, floating floor, etc. can be utilized only in the direction of the adjacent rib. This means that only 10 % of the total transverse stiffness of the floor is taken into account in the vibration calculation of the edge rib. This approximation is obtained by comparing the deflection of the cantilever (w_1) of a multi-span structure with a cantilever, to the deflection of the mid-span (w_2) of a similar multi-span structure as presented in the Figure A8 below. As a result of the comparison, $w_1 \approx 10 \times w_2$ and thus, the stiffnesses of the structures are $(EI)_1 \approx 0.1\ (EI)_2$.

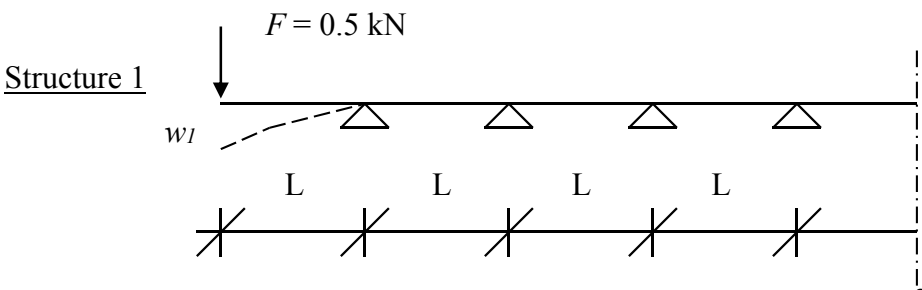

These design instructions are the property of Metsäliitto Cooperative, Metsä Wood. The instructions have been prepared in co-operation with VTT.

Structure 2

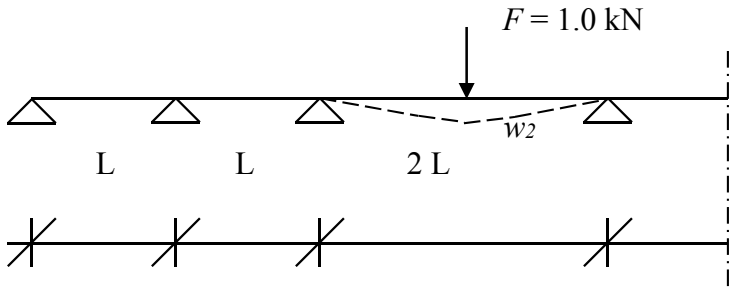

Figure A8. *Deflection of two multi-span structures with static concentrated force F.*

At the joints of two Kerto-Ripa box slabs which are connected to each other only at the top slab, the transverse stiffness of the floor is calculated as the sum of the following: 10 % of the transverse stiffness of the slabs and blockings, and 100 % of the transverse stiffness of the floating floor structure above the top slab.

Kerto-Ripa box slabs will have the following transverse bracing which shall be assembled during the manufacturing of the elements:

- When the span length L of the slab is 8 m or smaller ($L \leq 8$m), one transverse bracing line is assembled in the mid-span. When the span length is greater than 8 m (L> 8 m), three transverse bracing lines are assembled approximately at the quartiles of the span length.

- With box slabs, the transverse stiffness of the top and bottom slabs is calculated as follows:

$$(EI)_{B,slabs} = 0.13 \cdot B_{slab} \cdot E_{90,mean} \cdot \left(H_{tot}^{\ 3} - H_{web}^{\ 3}\right) \cdot \frac{1}{12} \qquad \text{(A.37)}$$

where

$(EI)_{B,slabs}$ = transverse stiffness of the top and bottom slabs

B_{slab} = width of the slab (=1.0m)

H_{tot} = total height of the box slab

H_{web} = height of the rib

These design instructions are the property of Metsäliitto Cooperative, Metsä Wood. The instructions have been prepared in co-operation with VTT.

- The reduction factor 0.13 is determined by the ratio $\frac{n}{s \cdot (n+1)}$

  where n is the number of transverse bracing lines per box slab, and s is the spacing of the bracing lines in the box slab. The value 0.13 (1/m) corresponds to the minimum ratio obtained for span lengths from 4 to 16 m. When L = 4..8 m, one bracing line is used. When 8 m < L ≤ 16 m, three bracing lines are used.

  - For L = 8 m, n = 1 and s = 4 m, the result of the ratio is
    $$\frac{1}{4 \cdot (1+1)} = \frac{1}{8} = 0.125 \approx 0.13$$
  - For L = 16 m, n = 3 and s = 4 m, the result of the ratio is
    $$\frac{3}{4 \cdot (3+1)} = \frac{3}{16} = 0.1875 > 0.13$$

11 Structural details of Kerto-Ripa elements

11.1 Details at supports

Kerto-Ripa elements shall have end beams or blocking lines at both ends of an element, and at intermediate supports. End beams are continuous beams connected to the ends of the ribs, and blocking lines consist of short beams (blockings) assembled between the ribs. Both structures have a height between 0.6 - 1.0 times the height of the ribs, and run through the element in the transverse direction.

End beams are made of Kerto-S, Kerto-Q, Kerto-Kate or plywood and blocking lines are made of Kerto-S or Kerto-Q beams which are nailed, screwed, glued, or nailed/screwed and glued to the ribs and slab(s) of the element. The structural detail of the element and its design method determine the Kerto product to be used in these cases.

See Chapter 10.3 of this section A for more information about blocking lines as transverse bracing of the Kerto-Ripa elements.

These design instructions are the property of Metsäliitto Cooperative, Metsä Wood. The instructions have been prepared in co-operation with VTT.

11.2 Lifting points

Kerto-Ripa elements shall also be designed to carry loads which occur during construction and lifting of the elements. The structural engineer shall design the elements according to the erection instructions presented by the supplier of the elements.

Blocking lines need to be assembled close to each lifting point.

11.3 Connections between two adjacent elements

Kerto-Ripa elements are normally connected to each other with mechanical fasteners. Diagonal screwing with spacing of 300 – 400 mm is recommended. The screw size is Ø5-6mm and length L = 100-120 mm depending on the thickness of the top slab.

The basic principles of connecting two adjacent Kerto-Ripa elements to each other are presented in Figure A9 below. Details A – D are for ribbed slabs and details E – G for box (and open box) slabs.

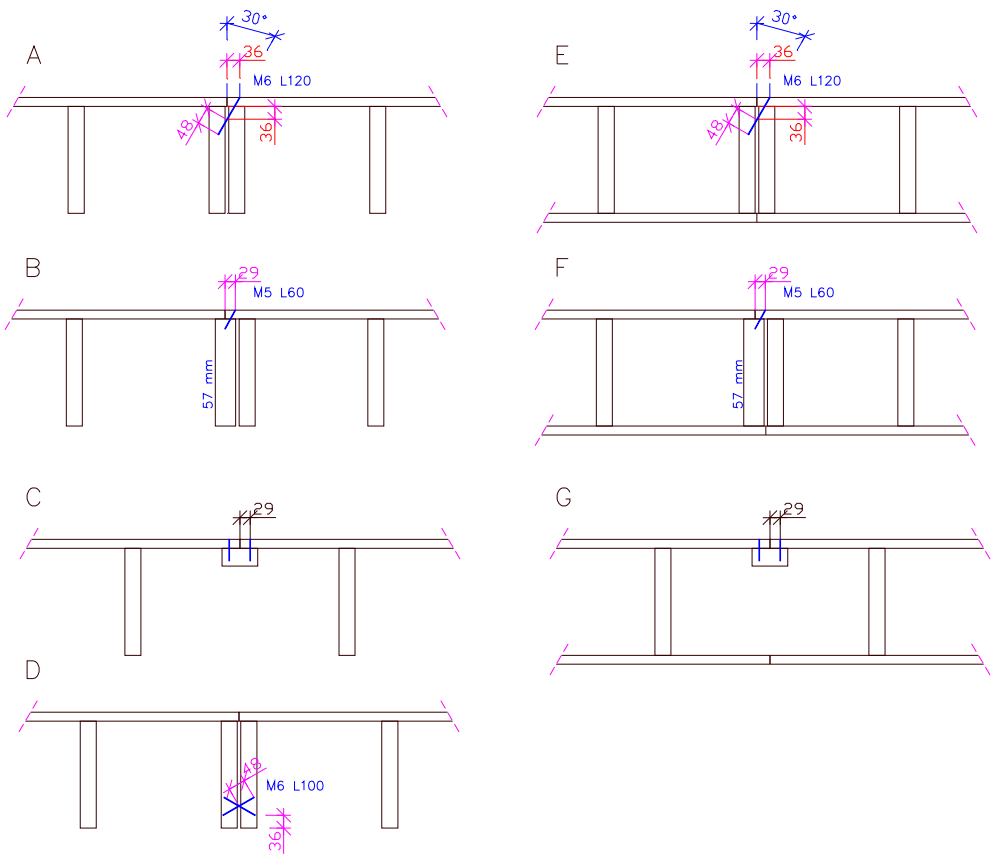

Figure A9. *Principles of connecting two Kerto-Ripa elements*

These design instructions are the property of Metsäliitto Cooperative, Metsä Wood. The instructions have been prepared in co-operation with VTT.

When blockings are used as transverse bracing in Kerto-Ripa ribbed slabs, the joints of the tension chord must not be located at the joints of the slabs. See Chapter 10.3 for instructions of connecting the tension chord to the blockings and ribs.

The following issue should be considered with details A, B and C of Kerto-Ripa ribbed slabs in Figure A9. If the ceiling structures underneath the element are assembled in the factory, and these structures are taken into account in the vibration design of the edge ribs or the element, adjacent elements must be connected to each other at the bottom of the elements.

With Kerto-Ripa box slabs, it is recommended to have a 5 mm horizontal offset between the outer edge of the Kerto slab and the Kerto edge rib. This is to avoid tolerance problems during the installation of the elements. See details E (top and bottom slab) and F (bottom slab) in Figure A9.

11.4 Holes in ribs

Holes can be inserted in the ribs of Kerto-Ripa elements using the following guidelines for the location and dimensioning.

- The geometrical rules of VTT certificate (184/03) Annex A will be used.
- At the location of the hole, the top and bottom slabs of the Kerto-Ripa element are not taken into account in the shear capacity. The shear resistance is that given in VTT Certificate (184/03) Annex A, multiplied by a factor $k_{Ø}$ = 0.65 for T- and Γ-sections and $k_{Ø}$ = 0.75 for I- and C-section.
- At the location of the hole, the effective bending stiffness $EI_{ef,ULS}$ is calculate according to chapter 4 so that the hole is reduced from the cross-section. This reduced value of the effective shall be used in the following design checks of the Kerto-Ripa element: bending moment resistance of chapter 5, shear resistance between slab and rib of chapter 6 (formulas (A.22) and (A.24)), axial compression and tension resistance of chapter 7 and combined stresses of chapter 8.
- The effect of the hole on the deflection and vibration design may be neglected.

These design instructions are the property of Metsäliitto Cooperative, Metsä Wood. The instructions have been prepared in co-operation with VTT.

B. Design example of Kerto-Ripa elements

1 General

Bending moment, shear, support reaction capacity and effective bending stiffness are verified for an intermediate rib of a symmetrical single span box-slab, where the web height h_w = 225 mm, the web thickness b_w = 45 mm and the thickness of the flanges h_f = 25 mm. The web spacing is 585 mm, the design span of the element is 5500 mm and support lengths are 100 mm in both ends. The elements are used as floor elements of an office space. Loads are g = 0.9 kN/m^2 and q = 2.5 kN/m^2, which give in ultimate limit state design maximum value of the bending moment M_d = 11 kNm and shear force per web V_d = 8 kN in the medium-term load-duration class and in the service class 1.

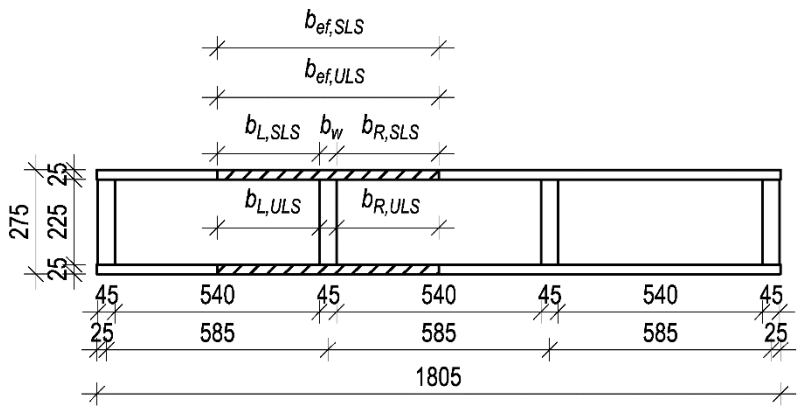

Figure B1. *Cross-section of the example Ripa element. Design is done at an intermediate rib area.*

2 Effective flange width b_{ef} and bending stiffness EI_{ef}

Since the top and bottom elements have the same thickness, they have the same effective flange widths:

In ultimate limit state:

$$b_{L,ULS,1} = b_{R,ULS,1} \le \min\begin{cases} 0{,}05 \cdot L_{ef} \\ 12 \cdot h_1 \\ \dfrac{b_{f,i}}{2} \end{cases} = \min\begin{cases} 0{,}05 \cdot 5500\text{mm} = 275\text{mm} \\ 12 \cdot 25\text{mm} = 300\text{mm} \\ \dfrac{540\text{mm}}{2} = 270\text{mm} \end{cases} = 270\text{mm}$$

These design instructions are the property of Metsäliitto Cooperative, Metsä Wood. The instructions have been prepared in co-operation with VTT.

$$b_{ef,ULS,1} = b_{L,ULS,1} + b_w + b_{R,ULS,1} = 270\text{mm} + 45\text{mm} + 270\text{mm} = 585\text{mm}$$

And in service limit state:

$$b_{L,SLS,1} = b_{R,SLS,1} \le \min\begin{cases} 0{,}05 \cdot L_{ef} \\ \dfrac{b_{f,i}}{2} \end{cases} = \min\begin{cases} 0{,}05 \cdot 5500\text{mm} = 275\text{mm} \\ \dfrac{540\text{mm}}{2} = 270\text{mm} \end{cases} = 270\text{mm}$$

$$b_{ef,SLS} = b_{L,SLS} + b_w + b_{R,SLS} = 270\text{mm} + 45\text{mm} + 270\text{mm} = 585\text{mm}$$

=> In ultimate limit state $b_{ef,ULS,1}$ = 585 mm and in serviceability limit state $b_{ef,SLS,1}$ = 585mm.

$$a_2 = \frac{E_1 \cdot A_1 \cdot (h_1 + h_2) - E_3 \cdot A_3 \cdot (h_2 + h_3)}{2 \cdot (E_1 \cdot A_1 + E_2 \cdot A_2 + E_3 \cdot A_3)} = 0$$

$$a_1 = a_3 = 0.5 \cdot h_1 + 0.5 \cdot h_2 - a_2 = 0.5 \cdot 25\text{mm} + 0.5 \cdot 225\text{mm} - 0 = 125\text{mm}$$

Effective bending stiffness $EI_{ef,ULS}$:

$$EI_{ef,ULS} = 2 \cdot E_{1,mean} \cdot \frac{b_{ef,ULS} \cdot h_1^3}{12} + E_{2,mean} \cdot \frac{b_2 \cdot h_2^3}{12} + 2 \cdot E_{1,mean} \cdot b_{ef,ULS} \cdot h_1 \cdot a_1^2 =$$

$$2 \cdot 10500\text{MPa} \cdot \frac{585\text{mm} \cdot (25\text{mm})^3}{12} + 13800\text{MPa} \cdot \frac{45\text{mm} \cdot (225\text{mm})^3}{12} +$$

$$2 \cdot 10500\text{MPa} \cdot 585\text{mm} \cdot 25\text{mm} \cdot (125\text{mm})^2 = 5.404 \cdot 10^{12}\,\text{Nmm}^2$$

Effective bending stiffness $EI_{ef,SLS}$:

$$EI_{ef,SLS} = 2 \cdot E_{1,mean} \cdot \frac{b_{ef,SLS} \cdot h_1^3}{12} + E_{2,mean} \cdot \frac{b_2 \cdot h_2^3}{12} + 2 \cdot E_{1,mean} \cdot b_{ef,SLS} \cdot h_1 \cdot a_1^2 =$$

$$2 \cdot 10500\text{MPa} \cdot \frac{585\text{mm} \cdot (25\text{mm})^3}{12} + 13800\text{MPa} \cdot \frac{45\text{mm} \cdot (225\text{mm})^3}{12} +$$

$$2 \cdot 10500\text{MPa} \cdot 585\text{mm} \cdot 25\text{mm} \cdot (125\text{mm})^2 = 5.404 \cdot 10^{12}\,\text{Nmm}^2$$

These design instructions are the property of Metsäliitto Cooperative, Metsä Wood. The instructions have been prepared in co-operation with VTT.

3 Bending moment capacity $R_{M,k}$

Bending moment capacity based on mean compression stress in the middle of the flange:

$$R_{M,c,k} = f_{c,0,1,k} \cdot \left(\frac{EI_{ef,ULS}}{E_{mean,1} \cdot a_1} \right) = 26\text{MPa} \cdot \left(\frac{5.404 \cdot 10^{12}\,\text{Nmm}^2}{10500\text{MPa} \cdot 125\text{mm}} \right) = 107{,}1\text{kNm}$$

Bending moment capacity based on mean tension stress in the middle of the flange:

$k_l = \min(1.1\ ;\ (3000/L_{ef})^{0,06} = \min(1.1;\ (3000/5500)^{0.06} = 0.964$

$$R_{M,t,k} = k_l \cdot f_{c,0,3,k} \cdot \left(\frac{EI_{ef,ULS}}{E_{mean,3} \cdot a_3} \right) = 0.964 \cdot 26\text{MPa} \cdot \left(\frac{5.404 \cdot 10^{12}\,\text{Nmm}^2}{10500\text{MPa} \cdot 125\text{mm}} \right) = 103{,}2\text{kNm}$$

Bending moment capacity based on axial edge stress of the web:

$k_h = \min(1.2\ ;\ (300/h_i\ )^{0.12} = \min(1.2\ ;\ (300/225)^{0.12} = 1.035$

$$R_{M,m,k} = k_h \cdot f_{m,k} \cdot \frac{EI_{ef,ULS}}{E_{mean,2} \cdot \left(|a_2| + \frac{h_2}{2} \right)} =$$

$$1.035 \cdot 44\text{MPa} \cdot \left(\frac{5.404 \cdot 10^{12}\,\text{Nmm}^2}{13800\text{MPa} \cdot \left(0 + \frac{225\text{mm}}{2} \right)} \right) = 158.5\text{kNm}$$

$R_{M,k} = \min(R_{M,c,k};\ R_{M,t,k};\ R_{M,m,k}\ ) = \min(107.1;\ 103.2;\ 158.5) = 103.2$ kNm

4 Shear capacity $R_{V,k}$

Shear capacity based on the joint between the slabs and web:

$b_{eff} = 0.7b_2 + 30$ mm $= 0.7 \cdot 45$ mm $+ 30$ mm $= 61.5$ mm

These design instructions are the property of Metsäliitto Cooperative, Metsä Wood. The instructions have been prepared in co-operation with VTT.

$$R_{V,top,k} = R_{V,bottom} = \min\left[f_{v,0,flat,slab,k} \cdot \left(\frac{k_{gl} \cdot b_{2,eff,t} \cdot EI_{ef,ULS}}{E_{mean,f} \cdot A_1 \cdot a_1} \right); f_{v,0,flat,S,k} \cdot \left(\frac{b_2 \cdot EI_{ef,ULS}}{E_{mean,f} \cdot A_1 \cdot a_1} \right) \right] =$$

$$\min\left[\underbrace{1.3\text{MPa} \cdot \left(\frac{1.3 \cdot 61.5\text{mm} \cdot 5.404 \cdot 10^{12}\,\text{Nmm}^2}{10500\text{MPa} \cdot 25\text{mm} \cdot 585\text{mm} \cdot 125\text{mm}} \right)}_{29.26\text{kN}}; \underbrace{2.3\text{MPa} \cdot \left(\frac{45\text{mm} \cdot 5.404 \cdot 10^{12}\,\text{Nmm}^2}{10500\text{MPa} \cdot 25\text{mm} \cdot 585\text{mm} \cdot 125\text{mm}} \right)}_{29.14\text{kN}} \right] = 29.1\text{kN}$$

Shear capacity based on the web:

$$R_{V,web,k} = f_{V,edge,web,k} \cdot \left(\frac{b_w \cdot EI_{ef,ULS}}{E_{mean,f} \cdot A_1 \cdot a_1 + \frac{E_{mean,w} \cdot b_w \cdot \left(\frac{h_w}{2} - a_2 \right)^2}{2}} \right) =$$

$$4{,}1\text{MPa} \cdot \left(\frac{45\text{mm} \cdot 5.404 \cdot 10^{12}\,\text{Nmm}^2}{10500\text{MPa} \cdot 585\text{mm} \cdot 25\text{mm} \cdot 125\text{mm} + \frac{13800\text{MPa} \cdot 45\text{mm} \cdot \left(\frac{225\text{mm}}{2} - 0 \right)^2}{2}} \right) = 43.1\text{kN}$$

$R_{V,k} = \min(R_{V,top,k}, R_{V,top,k}, R_{V,web,k}) = \min(29.1; 29.1; 43.1) = 29.1$ kN

5 Compression perpendicular to grain on supports

The bottom slab thickness is not more than 51 mm, uniform loading and $L_{support}$ is 100 mm:

$$k_{c,90,web,k} = 1.2$$

$$L_{ef,support} = L_{support} + 15\text{mm} = 115\text{mm}$$

These design instructions are the property of Metsäliitto Cooperative, Metsä Wood. The instructions have been prepared in co-operation with VTT.

$$R_{c,90,k} = k_{c,90,web,k} \cdot f_{c,90,web,k} \cdot b_w \cdot L_{ef,support} = 1.2 \cdot 6.0 \cdot 45 \cdot 115 = 37.2\text{kN}$$

Design conditions:

$$M_d \le R_{M,d}\,,\ V_d \le R_{V,d} \text{ and } V_d \le R_{c,90,d}\,.\ R_d = k_{\text{mod}LVL} \frac{R_k}{\gamma_{M,LVL}}$$

where

k_{mod} = 0.8 (for LVL in table 3.1 of EN 1995-1-1)

$\gamma_{M,LVL}$ is the partial safety factor for LVL according to the actual National Annex of EN 1995-1-1. In Finland $\gamma_{M,\,LVL}$ = 1.2.

Check of design conditions:

$$M_d = 11\text{kNm} \le R_{M,d} = 0.8 \cdot \frac{103.2\text{kNm}}{1.2} = 68.8\text{kNm} \Rightarrow OK$$

$$V_d = 8\text{kN} \le R_{V,d} = 0.8 \cdot \frac{29.1\text{kN}}{1.2} = 19.4\text{kN} \Rightarrow OK$$

$$V_d = 8\text{kN} \le R_{c,90,d} = 0.8 \cdot \frac{37.2\text{kN}}{1.2} = 24.8\text{kN} \Rightarrow OK\,.$$

6 Serviceability limit state design

6.1 Static deflections:

The deflection of the element shall be calculated using the total EI_{SLS} of the element.

$$EI_{SLS,tot} = \sum EI_{SLS} = 2 \cdot EI_{SLS,middle} + 2 \cdot EI_{SLS,edge} =$$
$$2 \cdot 5.404 \cdot 10^{12}\,\text{Nmm}^2 + 2 \cdot 3.2026 \cdot 10^{12}\,\text{Nmm}^2 = 17.2132 \cdot 10^{12}\,\text{Nmm}^2$$

Instantaneous moment deflections

Dead load: $u_{inst,M,g} = \dfrac{5gL^4}{384EI_{SLS,tot}} = \dfrac{5 \cdot 0.9 \cdot 1.805 \cdot 5.5^4}{384 \cdot 17.2132 \cdot 10^{12}} = 1.12\text{mm}$

Live load: $u_{inst,M,q} = \dfrac{5gL^4}{384EI_{SLS,tot}} = \dfrac{5 \cdot 2.5 \cdot 1.805 \cdot 5.5^4}{384 \cdot 17.2132 \cdot 10^{12}} = 3.12\text{mm}$

These design instructions are the property of Metsäliitto Cooperative, Metsä Wood. The instructions have been prepared in co-operation with VTT.

Instantaneous shear deflections, only the shear rigidity of the webs is taken in consideration.

Dead load: $u_{inst,V,g} = \frac{gL^2}{8GA} = \frac{0.9 \cdot 1.805 \cdot 5.5^2}{8 \cdot 600 \cdot \frac{5}{6} \cdot 4 \cdot 45 \cdot 225} = 0.30\text{mm}$

Live load: $u_{inst,V,q} = \frac{gL^2}{8GA} = \frac{2.5 \cdot 1.805 \cdot 5.5^2}{8 \cdot 600 \cdot \frac{5}{6} \cdot 4 \cdot 45 \cdot 225} = 0.84\text{mm}$

$u_{inst} = u_{inst,M,g} + u_{inst,M,q} + u_{inst,V,g} + u_{inst,V,q}$

$= 1.12 + 3.12 + 0.30 + 0.84 = 5.38 \text{ mm} < L/300 = 18.3\text{mm OK}$

Final deflections:

$k_{def} = 0.60$ (for LVL in table 3.2 of EN 1995-1-1 with service class 1)

$\psi_2 = 0.3$ (for live loads in office floors EN 1990)

$u_{fin} = (1 + k_{def}) \cdot u_{ins,q} + (1 + \psi_2 \cdot k_{def}) \cdot u_{inst,q}$

$= (1 + 0.6) \cdot (1.12 + 0.30) + (1 + 0.3 \cdot 0.6) \cdot (3.12 + 0.84)$

$= 6.95\text{mm} < L/200 = 27.5\text{mm OK}$

6.2 Vibration design

Lowest natural frequency

The mass m includes own weight of 90 kg/m^2 and the long term part of the live load of 30 kg/m^2.

$$f_1 = \frac{\pi}{2L^2}\sqrt{\frac{EI_{SLS,L}}{m}} = \frac{\pi}{2 \cdot 5.5^2}\sqrt{\frac{5.404 \cdot 10^{06}\,\text{Nm}^2}{(90\text{kg/m}^2 + 30\text{kg/m}^2) \cdot 0.585\text{m}}} = 14.4\text{Hz}$$

Deflection under 1 kN point load:

$$u_{1\text{kN}} = \frac{FL^2}{42 \cdot k_\delta \cdot EI_{SLS,L}}, k_\delta = \sqrt[4]{\frac{EI_b}{EI_{SLS,L}}}$$

These design instructions are the property of Metsäliitto Cooperative, Metsä Wood. The instructions have been prepared in co-operation with VTT.

For box slabs, EI_b is calculated as:

$$E_{mean,0,cross} \cdot b \cdot \frac{h^3 - h_w^{\ 3}}{12} = 2000 \cdot 1000 \cdot \frac{275^3 - 225^3}{12}$$
$$= 1.567 \cdot 10^{12}\,\text{Nmm}^2/\text{m}$$

$$k_\delta = \sqrt[4]{\frac{1.567 \cdot 10^{12}\,\text{Nmm}^2/\text{m}}{5.404 \cdot 10^{12}\,\text{Nmm}^2 \cdot \frac{1000\text{mm}}{585\text{mm}}}} = 0.641$$

$$u_{1kN} = \frac{1.0\text{kN} \cdot (5500\text{mm})^2}{42 \cdot 0.641 \cdot 5.404 \cdot 10^{12}\,\text{Nmm}^2 \cdot \frac{1}{585\text{mm}}} = 0.122\text{mm}$$

In Finnish national annex for EN1995-1-1, the requirements of vibration design are:

$f_1 \geq 9.0$ Hz, so 14.4 Hz of this example is ok

$$k = \max\left(\frac{1}{0.318 + 0.114 \cdot L}; 1\right) = \max\left(\frac{1}{0.318 + 0.114 \cdot 5.5\text{m}}; 1\right) = 1.06$$

1.06·0.5 mm = 0.53mm, so 0.13 mm of this example is OK.

These design instructions are the property of Metsäliitto Cooperative, Metsä Wood. The instructions have been prepared in co-operation with VTT.

C. Top slab supported Kerto Ripa elements

1 Application area of this annex

This annex concerns the supporting connection of Ripa elements according to ETA-07/0029. The resistance of the connection is considered according to the Eurocode 5 in service classes 1 and 2 ultimate limit state design.

The beam is supported from the top slab through its entire width. The spacing between the rib and supporting edge has to be equal or smaller than 60 mm in alternative A (see Figure C1) and 20 mm in alternative B (see Figure C2). Hanging loads on the beams close to the support have to be anchored to the effective rib height $h_{w,ef}$ (see Figures C1 and C2).

All supporting connection screws have to be self-drilling wood screws - neither pre-drilling nor hammering of screws is allowed. No gap between the wood parts is allowed and the screws are drilled up to the wood surface or slightly into the wood. A moment controlled screwing should be used so that the screwing moment is always below 80 % of the characteristic torsional strength of the screw.

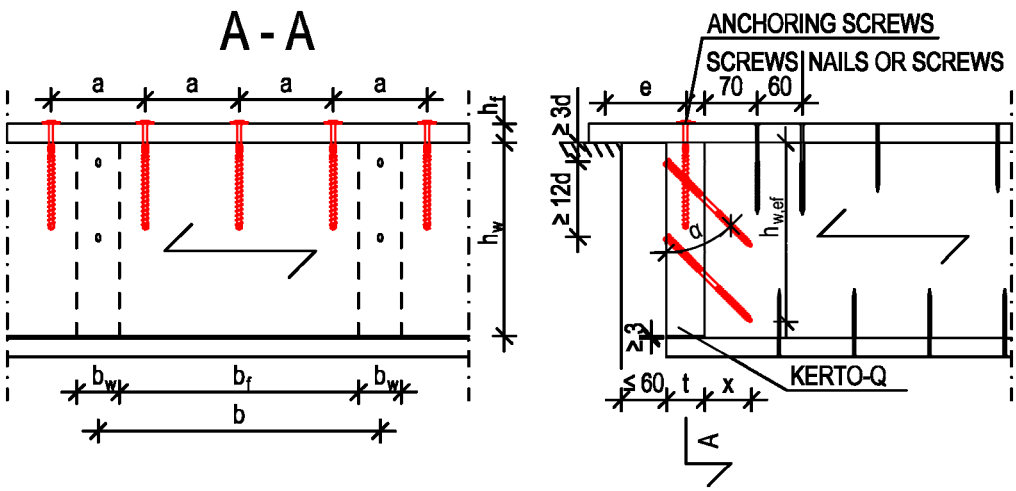

Figure C1. *Support of Ripa element from the top slab: alternative A. The element may not have the bottom slab shown in the figure.*

According to alternative A of Figure C1, the following structural conditions should be met:

- The end cross member is of Kerto-Q.
- When the element has bottom slab, a minimum of 3 mm spacing is left for the shrinkage of the rib, or the spacing is determined through shrinkage calculations, between the end cross member and the bottom slab.

These design instructions are the property of Metsäliitto Cooperative, Metsä Wood. The instructions have been prepared in co-operation with VTT.

- The end cross beam is connected to the ribs with self-drilling screws at 30°..60º angles. The screws are 5.0 - 10.0 mm thick general screws defined for inclined screw connections in VTT Certificate No 184/03 or in VTT-S-09068-11, 7.5 mm Würth AMO III screws, 6.0 or 8.0 thick Würth Assy VG Plus screws or 6.5 or 8.2 mm thick SFS Intec WT-T screws. In case of WT-T screws, the connection surface between the wood members should be located within the unthreaded centre part.
- The screws used in the end cross member inclined screw connection should fulfil the following requirements with relation to the width of the rib b_w:

  general screws, diameter $d \leq b_w/7.5$
  in case of 7.5 mm AMO III screws $b_w \geq 60$ mm
  in case of 6.0 mm VG Plus screws $b_w \geq 45$ mm
  in case of 8.0 mm VG Plus screws $b_w \geq 57$ mm
  in case of 6.5 mm SFS WT-T screws $b_w \geq 39$ mm and
  in case of 8.2 mm SFS WT-T screws $b_w \geq 51$ mm.
- The edge distance of the uppermost inclined screw head is at least $3d$ and the spacing between screws in the vertical direction is at least $12d$, where d is the screw diameter.
- For inclined screwing the end distance a_3 for flatwise Kerto-Q cross members shall be not less than $4d_{ef}$.
- The slab is connected to the end cross member by anchoring screws with constant spacing, $a \geq 12d$. The anchoring screws shall be partially threaded screws, where the threaded part is totally inside the end cross member and where the diameter is $d \leq t/8$, where t is the thickness of the end cross member. If $10d \leq a < 12d$ then diameter d shall be $\leq t/10$. With bore bit screw Würth Assy plus (ETA-11/0190) d = 6 or 8 mm, the diameter d shall be $d \leq t/6$ and $a \geq 10d$.
- End distance a_3 should be $\geq 12d$ for anchor screw for edgewise Kerto-Q. The end distance a_3 may be reduced to $\geq 10d$ if the inclined screws reinforce the end of Kerto-Q member.
- All screws attached to the edges or ends of the end cross member and the rib are to be located in the centreline of the member.
- The top slab screw-glue connection, the first three screws are placed with reduced spacing, as in figure C1.

These design instructions are the property of Metsäliitto Cooperative, Metsä Wood. The instructions have been prepared in co-operation with VTT.

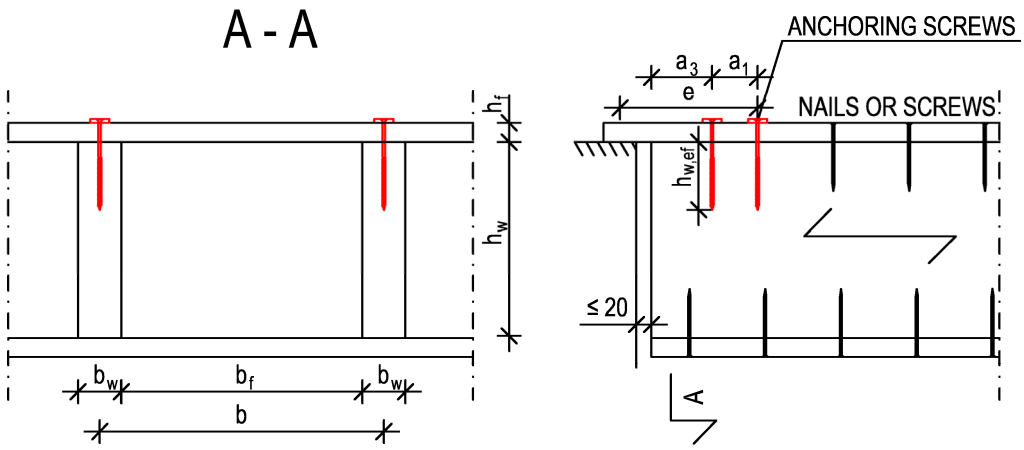

Figure C2. *Support of boxed or ribbed support from the top slab: alternative B. The ribbed beam does not have the bottom slab shown in the figure.*

According to alternative B of Figure C2, the following structural conditions should be met:

- The slab is connected to each rib in a similar way, so that in the end of the beam one or two partially threaded anchor screws are used*. These are located at the rib centreline so that the end distance a_3 of the first screw is 12*d* and the second 22*d* (spacing a_1 10*d*) from the rib end.
- The anchoring screws have their threaded part totally inside the rib.
- The anchoring screw diameter $d \leq b_w/8$, where b_w is the thickness of the rib. With bore bit screw Würth Assy plus (ETA-11/0190) $d = 6$ or 8 mm, the diameter d should be $d \leq b_w/6$.
- In the top slab, the first screw of the screw-glue connection is located at a 70 - 170 mm distance from the anchoring screw or with nail-gluing the first two nails are with reduced spacing (see Figure C2).
- Between the rib and the slab, triangular stiffeners according to ETA-07/0029 may be used.

2 Failure modes evaluated

In the design of a top slab supported Ripa element, the following shall be evaluated:

1. The shear capacity of the slab (rolling shear of Kerto-Q).

* Normally, it is advisable to use long anchoring screws with washers. To ensure sufficient shear capacity, the screw should normally extend to the half height of the web member ($h_{w,ef} \geq 0{,}5h_w$).

These design instructions are the property of Metsäliitto Cooperative, Metsä Wood. The instructions have been prepared in co-operation with VTT.

2. The bending capacity of the slab using a lever arm distance *e* (see Figures C1 and C2), in which the assembly tolerances are considered when determining the gap between the support and the beam (≤ 20 mm).
3. The shear capacity of the rib using the effective rib height $h_{w,ef}$ considering the cracking risk using the notched beam analogy.
4. The withdrawal capacity of the anchoring screws at LVL edge.
5. The pull through of anchoring screws, which should be lower than the tension capacity or the withdrawal capacity of the screws.
6. In alternative A, inclined screw connection capacity.

In addition, the connection of the slab to the support and the bearing stress of the slab are checked considering the production and assembly tolerances and a worst case scenario used.

3 Load bearing capacity

The shear force is carried totally by the rib of the Ripa element. In the following design equations, the force from a single rib to the top slab and support is considered.

3.1 Slab shear capacity

The characteristic value of the slab shear capacity for a single rib is

$$V_{f,k} = k_1 \cdot \frac{2}{3} \cdot b \cdot h_f \cdot f_{v,0,flat,k} \qquad \text{(C.1)}$$

where the following symbols have been used:

k_1 capacity factor, see more details below
b in alternative A, the distance between ribs ($b = b_w + b_f$)
in alternative B, the top slab effective width $b = b_{ef}$
h_f thickness of the top slab
$f_{v,0,flat,k}$ characteristic flatwise shear strength of Kerto-Q

$$k_1 = 1 \qquad \text{(C.1a)}$$

If following is conditions are fulfilled the k_1 can be taken as:

$$k_1 = \min\left\{1 + \frac{\text{flangelength on support}}{80\text{mm}}; k_{1,\max}\right\} \qquad \text{(C.1b)}$$

- $f_{v,0,flat,k}$ = 1,3 N/mm^2 shall be used
- Kerto-Q slab shall not have a cross veneer as the middle veneer; veneer layup for 27 mm shall be (II-III-II), and for the 33 mm (II-IIIII-II)

These design instructions are the property of Metsäliitto Cooperative, Metsä Wood. The instructions have been prepared in co-operation with VTT.

- Nominal width of the gap between the support and the end of the beam of the element shall be not more than 60 mm
  - $k_{1,max}$ is 2.0 for Kerto-Q 33 mm
  - $k_{1,max}$ is 2.0 for Kerto-Q 27 mm when the gap is equal or less than 20 mm
  - $k_{1,max}$ is 1.6 for Kerto-Q 27 mm when the gap is greater than 20 mm
- Anchoring screws shall be not more than 85 mm from the edge of the support
- The entire support load shall be taken as design shear force for the top flange without any reductions

The slab shear capacity of the alternative A is not needed to check, if the horizontal distance between the anchoring screws presented in figure C1 and the support edge is smaller than the top slab thickness h_f, when the assembly tolerances are taken into account.

If the supporting edge is not perpendicular to the grain direction of the slab, the characteristic value of the slab shear capacity for a single rib is

$$V_{f,\alpha.k} = V_{f,k} \cdot k_\alpha \qquad \text{(C.1c)}$$

where the following symbols have been used:

$V_{f,k}$ characteristic shear capacity parallel to grain, see (C.1)

$$k_\alpha = \sqrt{\frac{f_{v.90.flat.k}^{\;2}}{f_{v.90.flat.k}^{\;2} + \sin^2\alpha \cdot \left(k_1^{\;2} \cdot f_{v.0.flat.k}^{\;2} - f_{v.90.flat.k}^{\;2}\right)}} \qquad \text{(C.1d)}$$

α angle between the perpendicular direction of the slab and supporting edge

k_1 see equations (C.1a) and (C.1b)

$f_{v,0,flat,k}$ = 1.3 N/mm^2, flatwise shear strength parallel to grain

$f_{v,90,flat,k}$= 0.6 N/mm^2, flatwise shear strength perpendicular to grain

3.2 Slab bending capacity

The bending capacity of the slab is calculated with lever arm *e* shown in Figures C1 and C2, which is the distance between the support force and the farthest anchoring screw. The characteristic capacity of support force corresponding to top slab bending capacity is

These design instructions are the property of Metsäliitto Cooperative, Metsä Wood. The instructions have been prepared in co-operation with VTT.

$$V_{\mathrm{m,k}} = \frac{b \cdot h_{\mathrm{f}}^{\,2}}{6 \cdot e} \cdot f_{\mathrm{m,0,flat,k}} \qquad \text{(C.2)}$$

where h_f and b are defined as in equation (C1), e is the distance according to Figures C1 and C2 and $f_{m,0,flat,k}$ is the characteristic flatwise bending strength of Kerto-Q.

If the supporting edge is not perpendicular to the grain direction of the slab, the effect of the angle should be taken into account. Reduction factors for the characteristic flatwise bending strength $f_{m,0,flat,k}$ are given in Table C1a.

Table C1a. *Reduction factors for Kerto-Q member in flatwise bending with an angle α between the perpendicular direction of the slab and supporting edge.*

	Angle to the grain direction of the face veneers[1)]								
	0°	2.5°	5°	10°	15°	30°	45°	60°	90°
Reduction factor	1.00	1.00	0.90	0.70	0.50	0.25	0.20	0.20	0.22

[1)]Intermediate values can be interpolated

3.3 Rib shear capacity

The shear capacity of the rib is calculated for the effective height of the rib $h_{w,ef}$ determined as the distance between the tip of tension loaded screws and the upper edge of rib (see Figures C1 and C2). For supporting alternative A, $h_{w,ef}$ is the distance from the furthest tip of the inclined screws to the upper edge of the rib. The effect of perpendicular to grain tension stress on the rib's cracking risk is considered with the notched beam reduction coefficient k_v. The characteristic shear force capacity of the rib

$$V_{\mathrm{w,k}} = \frac{2}{3} \cdot b_{\mathrm{w}} \cdot h_{\mathrm{w,ef}} \cdot k_{\mathrm{v}} \cdot f_{\mathrm{v,0,edge,k}} \qquad \text{(C.3)}$$

where

$$k_{\mathrm{v}} = \frac{6}{\sqrt{h_{\mathrm{w}}}\left(\sqrt{\alpha(1-\alpha)} + 0{,}8 \cdot \frac{x}{h_{\mathrm{w}}}\sqrt{\frac{1}{\alpha} - \alpha^2}\right)} \leq 1 \qquad \text{(C.4)}$$

where the following symbols have been used

These design instructions are the property of Metsäliitto Cooperative, Metsä Wood. The instructions have been prepared in co-operation with VTT.

b_w	rib thickness
$h_{w,ef}$	effective rib height according to Figures C1 and C2
$f_{v,0,edge,k}$	characteristic edgewise shear strength of Kerto-S
h_w	rib height
α	$h_{w,ef}/h_w$
x	horizontal distance between the tension loaded screws in the rib: in Figure C1 (alternative A) distance between the end of rib beam and of the tips of the inclined screws in Figure C2 (alternative B) spacing between the anchoring screws (in case of a single screw $x = 0$).

3.4 Withdrawal capacity of anchoring screws

The withdrawal capacity is calculated using the withdrawal strength of actual screw tested for the edge joints of Kerto-S or Kerto-Q according to EN 1382. For self-drilling anchoring screws in accordance with EN 14592 with the screw diameter $4.5 \leq d \leq 8$ mm, the inner thread diameter $d_1 < 0.7d^{**}$ and the smooth shank diameter $d_s \leq 0.8d^{**}$, the characteristic withdrawal capacity in the edge of Kerto-S or Kerto-Q may be calculated as follows

$$R_{t,k} = n^{0,9} \cdot f_{ax,k} \cdot d \cdot \ell_{ef} \qquad \text{(C.5)}$$

where the following symbols have been used

n	number of anchoring screws per one rib
l_{ef}	threaded length of the screw in Kerto-LVL member edge
$f_{ax,k}$	characteristic value of the withdrawal parameter for Kerto-LVL edge
$f_{ax,k} = 10$	N/mm^2 (C.6)

Anchoring screw force should be multiplied with 2.4 for the Kerto-Q 27mm and 1.4 for the Kerto-Q 33 mm if the gap between the support and end beam is greater than 20 mm.

Other values for characteristic withdrawal parameter $f_{ax,k}$ may also be used if values according to EN 14592 from notified body for edgewise Kerto-Q are available.

** These requirements are fulfilled for example for the follow general screws: SFS-Intec and Würth Assy screws.

These design instructions are the property of Metsäliitto Cooperative, Metsä Wood. The instructions have been prepared in co-operation with VTT.

Screws according to European Technical Assessment (ETA) should be designed using the design parameters and equations given in the ETA or in VTT statement referring to ETA for Kerto LVL connections.

3.5 Pull-through capacity of anchoring screws

The characteristic pull-through capacity of the anchoring screws should be taken as:

$$R_{\mathrm{c,k}} = n \cdot f_{\mathrm{head,k}} \cdot d_h^{\,2} \cdot \left(\frac{480\,\mathrm{kg/m^3}}{\rho_{\mathrm{a}}} \right)^{0.8} \qquad \text{(C.7)}$$

where:

n	number of anchoring screws per one rib
$f_{head,k}$	characteristic pull-through parameter of the screw determined in accordance with EN 14592 for timber of the associated density ρ_a (kg/m^3) or for Kerto-Q in flatwise, when ρ_a = 480 kg/m^3
d_h	diameter of the screw head

Anchoring screw force should be multiplied with 2.4 for the Kerto-Q 27 mm and 1.4 for the Kerto-Q 33 mm if the gap between the support and end beam is greater than 20 mm.

Screws according to European Technical Assessment (ETA) should be designed using the design parameters and equations given in the ETA or in VTT statement referring to ETA for Kerto LVL connections.

In case of thrust journal screws or in case of cylinder or hexagonal screw heads with washer, the characteristic pull-through capacity of the screws may be calculated from

These design instructions are the property of Metsäliitto Cooperative, Metsä Wood. The instructions have been prepared in co-operation with VTT.

$$R_{c,k} = n \cdot 4 \cdot f_{c,90,flat,k} \cdot \left(A_h - \frac{\pi \cdot d_s^{\,2}}{4} \right) \qquad \text{(C.8)}$$

where the following symbols have been used:

n	number of anchoring screws per one rib
$f_{c,90,flat,k}$	characteristic flatwise compression strength perpendicular to grain of Kerto-Q
A_h	area of the screw head or the washer including the hole
d_s	diameter of the smooth shank of the screw. If the head of the screw is not in contact with the timber member the actual size of the opening diameter of the washer shall be used as d_s.

Anchoring screw force should be multiplied with 2.4 for the Kerto-Q 27 mm and 1.4 for the Kerto-Q 33 mm if the gap between the support and end beam is greater than 20 mm.

The thickness of the thrust journal or the thickness of washer shall be at least $h_t \geq \max(0.3d;\ d_w/12)$, where d_w is the diameter of the thrust journal or the washer.

The washer shape does not need to be circular. The bearing capacity per anchor screw of a steel plate shall be calculated for a circular washer with a diameter which is the minimum of $(12h_t;\ 4d_h)$, where h_t is the thickness of the steel plate and d_h is the diameter of the screw head. The capacity of the steel plate shall be also checked.

The steel plate capacity for washer in general case may be checked with equation (C.8a) in case of large washer $d_w \geq \min(12h_t;\ 4d_h)$ and with equation (C.8b) in case of small washer $d_w < \min(12h_t;\ 4d_h)$. Due the iterative method, the calculation can be started by using $h_t = 0.3d$ as general start value, where d is the screw diameter. See figure C2a.

$$h_t \geq \max\left(0.3d;\ \frac{d_w}{12};\ \begin{matrix} 0 & f_{yd} \geq 288 f_{c.90.flat.d} \\ \sqrt{\dfrac{32 d_h^{\,2} \cdot f_{c.90.flat.d}}{f_{yd}}} & f_{yd} < 288 f_{c.90.flat.d} \end{matrix} \right) \qquad \text{(C.8a)}$$

$$h_t \geq \max\left(0.3d;\ \frac{d_w}{12};\ \sqrt{\frac{2 d_w^{\,2} \cdot f_{c.90.flat.d}}{f_{yd}}} \right) \qquad \text{(C.8b)}$$

where d is the screw diameter

These design instructions are the property of Metsäliitto Cooperative, Metsä Wood. The instructions have been prepared in co-operation with VTT.

d_w is the diameter of the thrust journal or the washer

d_h is the diameter of the screw head

$f_{c,90,flat,d}$ is the Kerto-Q design compressive strength flatwise perpendicular to grain

f_{yd} is the design yield strength of the washer

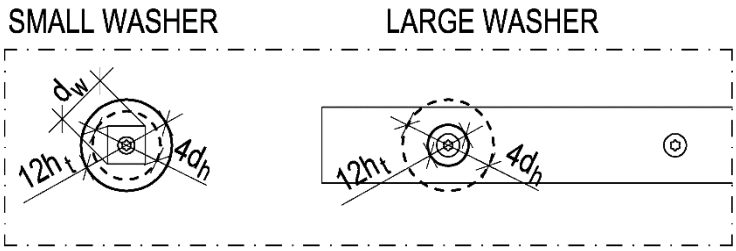

Figure C2a. *Dimensions of steel plate washer*

The pull through of anchoring screws shall be the governing mode of failure. So the following condition should be satisfied

$$R_{c,k} < \min \begin{cases} R_{t,k} \\ n^{0.9} \cdot f_{tens,k} \end{cases} \tag{C.9}$$

where $R_{t,k}$ is the characteristic withdrawal capacity of anchoring screws and $f_{tens,k}$ is the characteristic value of the screw tensile capacity.

3.6 Capacity of inclined screws

In case of supporting alternative A, using general wood screws, ABC Spax-S screws, Würth AMO III screws, Würth VG Plus screws or SFS-WT-T screws, the characteristic capacity of the inclined screw connection

$$R_{s,k} = n_s^{0.9} F_{T,Rk} \left(\cos\alpha + \mu \sin\alpha \right) \tag{C.10}$$

where:

n_s number of screws in the inclined screw connection;

$F_{T,Rk}$ characteristic withdrawal capacity, using eq. (C.11);

α angle between screw axis and joint line (= screwing angle 30°..60°);

μ kinetic friction coefficient between the wood members, the value $\mu = 0{,}26$ may be used.

These design instructions are the property of Metsäliitto Cooperative, Metsä Wood. The instructions have been prepared in co-operation with VTT.

The characteristic withdrawal capacity of the screw

$$F_{\mathrm{T,Rk}} = \min \begin{cases} f_{\mathrm{ax,1,k}} d s_1 + f_{\mathrm{head,k}} d_{\mathrm{h}}^2 \\ f_{\mathrm{ax,2,k}} d\, s_2 \\ f_{\mathrm{tens,k}} \end{cases} \tag{C.11}$$

where:

$$f_{\mathrm{ax,i,k}} = f_{\mathrm{ax,45,k}} \cdot \left(\frac{\alpha}{150} + 0.7 \right) \cdot \left(\frac{8d}{s_{\mathrm{i}}} \right)^{0.2} \tag{C.12}$$

d outer diameter of the thread (screw nominal size);

s_1 threaded length of the screw in the head side member (Kerto-Q flatwise);

s_2 threaded length of the screw in the point side member (Kerto-S end);

$f_{\mathrm{tens,k}}$ characteristic tensile capacity of the screw determined in accordance with EN 14592; in Table C2 the tensile capacities of the actual screws are given;

$f_{ax,45,k}$ characteristic withdrawal strength parameter of the screw in angle of 45° for the end of Kerto-S or for the flatwise of Kerto-Q; in Table C1 the withdrawal strength parameters of the actual screws are given;

d_{h} is the head diameter of the screw;

$f_{\mathrm{head,k}}$ is the characteristic pull-through parameter of the screw.

The pull through strength of screw head is determined for Kerto-LVL in accordance with EN 14592 or when the angle between the screw axis and the grain is 45º, it may be calculated with the following, otherwise it may be assumed as zero:

$$f_{\mathrm{head,k}} = 57 \left(\frac{d_h}{d} - 1 \right) \quad \mathrm{N/mm^2} \quad \text{, when } d_{\mathrm{h}} \leq 2d. \tag{C.13}$$

These design instructions are the property of Metsäliitto Cooperative, Metsä Wood. The instructions have been prepared in co-operation with VTT.

Table C1. *Characteristic withdrawal strength parameters* $f_{ax,45,k}$ (N/mm^2) *for threaded part of general , ABC Spax-S, Würth AMO III, SFS Intec WT-T and Würth Assy VG Plus screws for inclined screw connection of supporting alternative A.*

Screw	General / Spax-S		AMO III	VG Plus		SFS-WT-T
Member *d* =	5.0-7.0	8.0-10.0	7.5	6.0	8.0	6.5 or 8.2
Kerto-Q flatwise (1)	14.0	11.0	12.0	17.0	15.0	15.5
Kerto-S end, (2)	12.0	9.5	10.5	12.5	12.0	13.5

Table C2. *Characteristic tensile capacity* $f_{tens,k}$ [kN] *for general, ABC Spax-S carbon steel, Würth AMO III, SFS Intec WT-T and Würth Assy VG Plus screws*

Screw *d* [mm]	General	Spax-S	AMO III	SFS WT-T	VG Plus
5.0	3.5	7.9	-	-	-
6.0	5.1	11.3	-	-	11.3
6.5	-	-	-	10.0	-
7.0	6.9	15.4	-	-	-
7.5	-	-	9.0	-	-
8.0	9.0	17.0	-	-	18.9
8.2	-	-	-	19.0	-
10.0	14.1	28.0	-	-	-

These design instructions are the property of Metsäliitto Cooperative, Metsä Wood. The instructions have been prepared in co-operation with VTT.

4 Design example

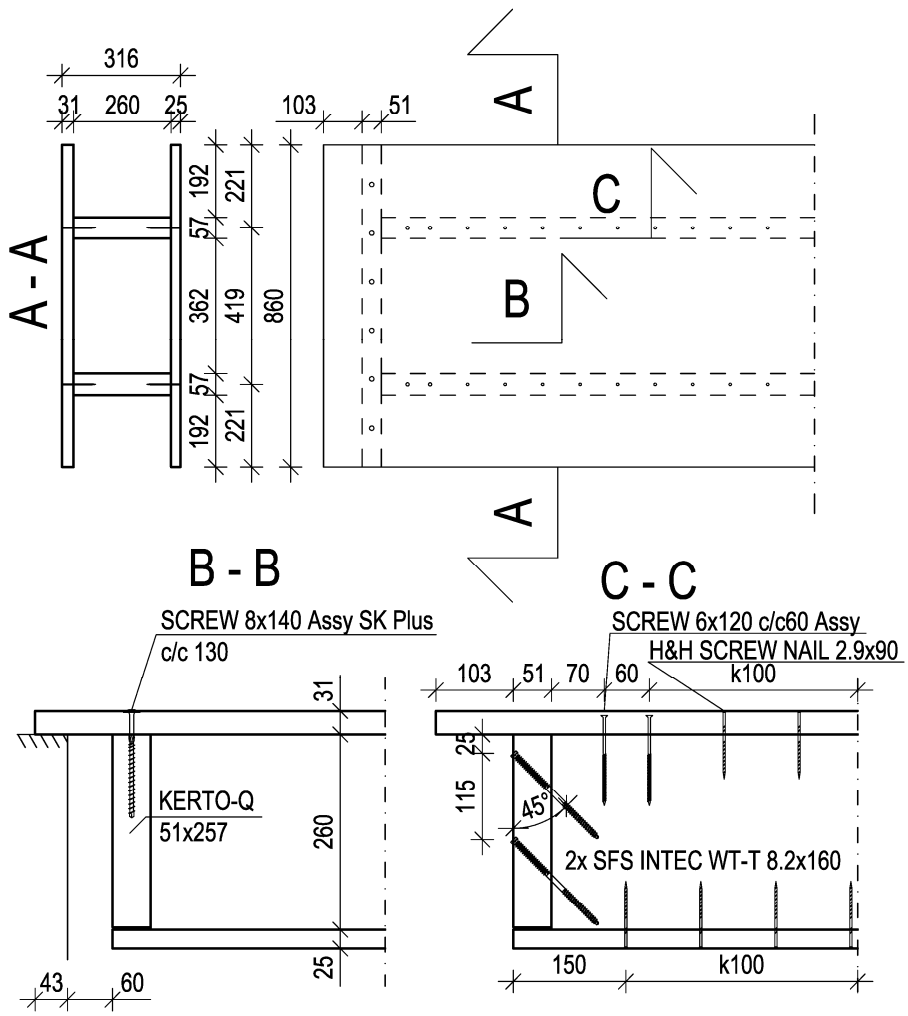

Figure C3. *Top slab supported Ripa element with end cross beam and inclined screws.*

It is assumed that according to national rules, design value of support force of box beam is 14.0 kN in medium term load-duration class and in service class 1 thus design force for one rib $\boldsymbol{F_d}$ = 14.0/2 = **7.0 kN**.

<u>1° Slab shear capacity for one rib:</u>

$$V_{f,k} = k_1 \cdot \frac{2}{3} \cdot b \cdot h_f \cdot f_{v,0,flat,k}$$

b = 860/2 = 430 mm, width of Ripa element for one rib

h_f = 31 mm, thickness of top slab

$f_{v,0,flat,k}$ = 1,3 N/mm^2, rolling-shear strength of Kerto-Q

These design instructions are the property of Metsäliitto Cooperative, Metsä Wood. The instructions have been prepared in co-operation with VTT.

$k_{1,max}$ = 1.6, Kerto-Q 27 mm, gap 60 mm

$$k_1 = \min\left\{1 + \frac{\text{flangelengthon support}}{80\text{mm}}; k_{1,\max}\right\} = \min\left\{1 + \frac{43\text{mm}}{80\text{mm}}; 1.6\right\} = 1.537$$

$$V_{f,k} = 1.537 \cdot \frac{2}{3} \cdot 430\,\text{mm} \cdot 31\text{mm} \cdot 1.3\,\text{N/mm}^2 = 17.7\text{kN}$$

2° Slab bending capacity for one rib:

$$V_{m,k} = \frac{b \cdot h_f^{\,2}}{6 \cdot e} \cdot f_{m,0,flat,k}$$

The location of the support reaction is determined according to the compression strength capacity of the Kerto-Q top slab and with the supporting beam of Kerto-S. The edgewise Kerto-S compression capacity of 6 N/mm2 which is about three times the capacity of the flatwise Kerto-Q. Because of this difference the compression capacity of Kerto-Q will give required support length l_s.

$$l_s = \frac{7\text{kN}}{\frac{0.8 \cdot 2.2\text{N/mm}^2}{1.2} \cdot 430\text{mm}} = 12\text{mm}$$

$$e = \frac{51\text{mm}}{2} + 60\,\text{mm} + \frac{12\,\text{mm}}{2} = 91.5\text{mm}$$

$f_{m,0,flat,k}$ = 32.0 N/mm^2, flatwise bending strength of Kerto-Q

$$V_{m,k} = \frac{430\text{mm} \cdot (31\text{mm})^2}{6 \cdot 91.5\text{mm}} \cdot 32.0\text{N/mm}^2 = 24.0\text{kN}$$

3° Rib shear capacity:

$$V_{w,k} = \tfrac{2}{3} \cdot b_w \cdot h_{w,ef} \cdot k_v \cdot f_{v,0,edge,k}$$

b_w = 57 mm, thickness of rib

$f_{v,0,edge,k}$ = 4.1 N/mm^2, shear strength of Kerto-S

$h_{w,ef}$ = 25 + 115 + 160 cos45° = 253 mm

$\alpha = h_{w,ef} / h_w$ = 253 / 260 = 0.973

These design instructions are the property of Metsäliitto Cooperative, Metsä Wood. The instructions have been prepared in co-operation with VTT.

$$k_v = \frac{6}{\sqrt{h_w}\left(\sqrt{\alpha(1-\alpha)} + 0{,}8 \cdot \frac{x}{h_w}\sqrt{\frac{1}{\alpha} - \alpha^2}\right)}$$

$$= \frac{6}{\sqrt{260} \cdot \left(\sqrt{0.973 \cdot (1-0.973)} + 0.8\frac{62}{260} \cdot \sqrt{\frac{1}{0.973} - 0.973^2}\right)} = 1.72$$

$$V_{w,k} = \frac{2}{3} \cdot 57\text{mm} \cdot 254\text{mm} \cdot \min(1.72; 1.00) \cdot 4.1\frac{\text{N}}{\text{mm}^2} = 39.5\text{kN}$$

4° Withdrawal capacity of anchoring screws for one rib:

$$R_{t,k} = n^{0.9} \cdot f_{ax,k} \cdot d \cdot l_{ef}$$

n = 3 number of anchoring screws for one rib

l_{ef} = 100 mm threaded length of the screw (Assy Plus 8x140 with large washer head)

d = 8.0 mm, nominal diameter of the screw

$f_{ax,k}$ = 10 N/mm^2

$$R_{t,k} = 3^{0.9} \cdot 10\text{N/mm}^2 \cdot 8\text{mm} \cdot 100\text{mm} = 21.5\text{kN}$$

5° Pull through capacity of anchoring screws:

$$R_{c,k} = n \cdot f_{head,k} \cdot d_h^2 \cdot \left(\frac{480\text{kg/m}^3}{\rho_a}\right)^{0.8} \quad \text{and} \quad R_{c,k} < \min\begin{cases} R_{t,k} \\ n \cdot f_{tens,k} \end{cases}$$

$f_{head,k}$ = 10 N/mm^2

d_h = 22.1 mm

ρ_a = 350 kg/m^3

$f_{tens,k}$ = 20 kN

$$R_{c,k} = 3 \cdot 10.0\text{N/mm}^2 \cdot (22.1\text{mm})^2 \cdot \left(\frac{480\text{kg/m}^3}{350\text{kg/m}^3}\right)^{0.8} = 18.8\text{kN}$$

$$R_{c,k} = 18.8\text{ kN} < \min\begin{cases} 21.5\text{kN} \\ 3^{0.9} \cdot 20\text{kN} = 53.7\text{kN} \end{cases} \qquad \text{OK}$$

These design instructions are the property of Metsäliitto Cooperative, Metsä Wood. The instructions have been prepared in co-operation with VTT.

6° Capacity of inclined screws:

$$R_{s,k} = n_s^{0.9} \cdot \min \begin{cases} f_{ax,1,k} \cdot d \cdot s_1 + f_{head,k} \cdot d_h^{\,2} \\ f_{ax,2,k} \cdot d \cdot s_2 \\ f_{tens,k} \end{cases} \cdot (\cos\alpha + \mu \sin\alpha)$$

$n_s = 2$ number of inclined screws for one rib,

$d = 8.2$ mm diameter of inclined screws WT-T-8,2x160,

$d_h = 10$ mm diameter of the head

$s_1 = 57$ mm threaded length,

$s_2 = 61$ mm threaded length,

$f_{ax,,45,1,k} = 15.5$ N/mm^2

$$f_{\mathrm{ax,1,k}} = 15.5\mathrm{N/mm}^2 \cdot \left(\frac{45}{150} + 0.7\right) \cdot \left(\frac{8 \cdot 8.2}{57}\right)^{0.2} = 15.5\mathrm{N/mm}^2 \cdot (1) \cdot (1.028) = 15.9\mathrm{N/mm}^2$$

$f_{ax,45,2,k} = 13.5$ N/mm^2

$$f_{\mathrm{ax,2,k}} = 13.5\mathrm{N/mm}^2 \cdot \left(\frac{45}{150} + 0.7\right) \cdot \left(\frac{8 \cdot 8.2}{61}\right)^{0.2} = 13.5\mathrm{N/mm}^2 \cdot (1) \cdot (1.015) = 13.7\mathrm{N/mm}^2$$

$f_{tens,k} = 19$ kN

$\mu = 0.26$

$$f_{\mathrm{head,k}} = 57\left(\frac{d_h}{d} - 1\right) = 57 \cdot \left(\frac{10\mathrm{mm}}{8.2\mathrm{mm}} - 1\right) = 12.5\mathrm{N/mm}^2$$

$$R_{s,k} = 2^{0.9} \cdot \min \begin{cases} 15.9 \cdot 8.2 \cdot 57 + 12.5 \cdot 10^2 \\ 13.7 \cdot 8.2 \cdot 61 \\ 19 \end{cases} \cdot (\cos 45 + \mu \sin 45) = 11.3\mathrm{kN}$$

$R_{s,k} = 11.3$ kN

Design conditions:

$$F_d \le V_d = k_{\mathrm{mod}} \cdot \frac{V_k}{\gamma_{M,LVL}} \text{ and } F_d \cdot k_{anchors} \le R_d = \cdot k_{\mathrm{mod}} \cdot \frac{R_k}{\gamma_{M,conn}}$$

where:

V_k is the characteristic resistance of LVL ($V_{f,k}$; $V_{m,k}$ and $V_{w,k}$)

R_k is the characteristic resistance of connection ($R_{t,k}$; $R_{c,k}$ and $R_{s,k}$)

These design instructions are the property of Metsäliitto Cooperative, Metsä Wood. The instructions have been prepared in co-operation with VTT.

k_{mod} = 0.8 (for LVL in table 3.1 of EN 1995-1-1)

$\gamma_{M,LVL}$ is the partial safety factor for LVL according to the actual National Annex of EN 1995-1-1

$\gamma_{M,conn}$ is the partial safety factor for connections of LVL members according to the actual National Annex of EN 1995-1-1

$k_{anchors}$ is the multiplier for anchoring screw force that is 2.4 for the Kerto-Q 27 mm and 1.4 for the Kerto-Q 33 mm if the gap between the support and end beam is greater than 20 mm. $k_{anchors}$ = 1.0 for inclined screw connection.

In Finland $\gamma_{M,LVL}$ = 1.2 and $\gamma_{M,conn}$ = 1.2

Check of design conditions:

1. Slab shear:

$$F_d = 7.0\text{kN} \le V_{f,d} = 0.8 \cdot \frac{17.7\text{kN}}{1.2} = 11.8\text{kN}$$

2. Slab bending:

$$F_d = 7.0\text{kN} \le V_{m,d} = 0.8 \cdot \frac{24.0\text{kN}}{1.2} = 16.0\text{kN}$$

3. Rib shear:

$$F_d = 7.0\text{kN} \le V_{w,d} = 0.8 \cdot \frac{39.5\text{kN}}{1.2} = 26.3\text{kN}$$

4. Withdrawal of anchoring screws:

$$F_d = 1.4 \cdot 7.0\text{kN} = 9.8\text{kN} \le R_{t,d} = 0.8 \cdot \frac{21.5\text{kN}}{1.2} = 14.3\text{kN}$$

5. Pull-though of anchoring screws:

$$F_d = 1.4 \cdot 7.0\text{kN} = 9.8\text{kN} \le R_{c,d} = 0.8 \cdot \frac{18.8\text{kN}}{1.2} = 12.5\text{kN}$$

6. Failure of inclined screw:

$$F_d = 1.0 \cdot 7.0\text{kN} \le R_{s,d} = 0.8 \cdot \frac{11.3\text{kN}}{1.2} = 7.5\text{kN}$$

These design instructions are the property of Metsäliitto Cooperative, Metsä Wood. The instructions have been prepared in co-operation with VTT.

D. Support reinforced Kerto-Ripa elements

1 Application area of this annex

This annex concerns the support reinforcements of Ripa elements according to ETA-07/0029. The resistance of the following is considered according to the Eurocode 5 in service classes 1 and 2 ultimate limit state design.

It is possible to reinforce Kerto-Ripa elements against compression perpendicular to the grain by structurally gluing reinforcement pieces to the ribs. Not the reinforcement piece nor the rib need to be sanded for the following design instructions. These reinforcements shall be made from Kerto-S and they may be single or double sided. If double sided reinforcement is used, the pieces shall be same size and thicknesses. At intermediate support the reinforcement pieces shall be positioned centrally to the centre line of the support. There shall always be at least one crosswise blocking line near the centre of the support.

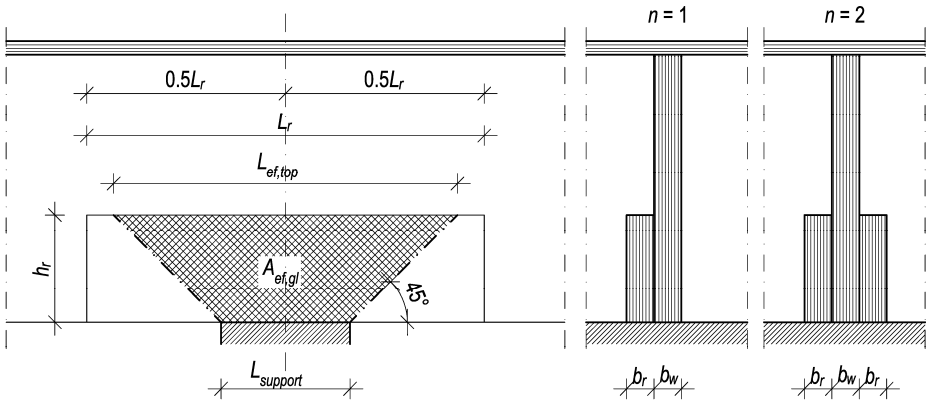

Figure D1. Detail of reinforced rib at the centre support

These design instructions are the property of Metsäliitto Cooperative, Metsä Wood. The instructions have been prepared in co-operation with VTT.

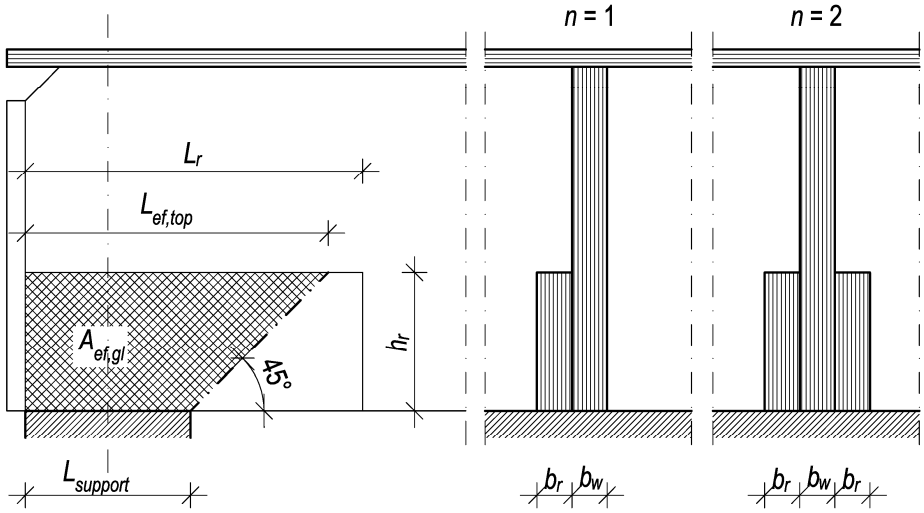

Figure D2. Detail of reinforced rib at the end support

2 Failure modes evaluated

In the design of a support reinforced Ripa element, the following shall be evaluated:

1. Reinforced compression perpendicular to grain capacity
2. Top level of the reinforcement compression perpendicular to grain capacity
3. Glue line shear capacity
4. Web buckling capacity

In addition, the bearing stress of the supporting material should be separately checked.

3 Load bearing capacity

3.1 Reinforced compression capacity

The resistance is based on the stress at the contact area between the reinforced web and the support

$$R_{c,90,re,k} = k_{c,90} \cdot f_{c,90,web,k} \cdot \left(b_w + 0.7 \cdot n \cdot b_r\right) \cdot L_{ef,support} \qquad \text{(D.1)}$$

where the following symbols have been used:

$k_{c,90}$	1.0 for Kerto-S
b_w	width of web
n	amount of reinforcement pieces
b_r	width of reinforcement piece but not more than 51 mm

These design instructions are the property of Metsäliitto Cooperative, Metsä Wood. The instructions have been prepared in co-operation with VTT.

$L_{ef,support}$ effective contact length parallel to the grain. It is obtained by increasing the actual contact length $l = L_{support}$ at each side by 15 mm but not more than a, l or $l_1/2$ as presented in EN 1995-1-1 6.1.5(1).

See Figure D1 or Figure D2 for parameters b_w, b_r, n and $L_{support}$.

3.2 Top level of reinforcement compression capacity

The resistance of the web is based on the stress at the top level of the reinforcement piece

$$R_{c,90,top,k} = f_{c,90,web,k} \cdot b_w \cdot L_{ef,top} \tag{D.2}$$

where the following symbols have been used:

b_w width of web
$L_{ef,top}$ effective contact length at the top level of reinforcement piece

$$L_{ef,top} = \min\left(L_r, L_{support} + k_{pos} \cdot h_r\right) \tag{D.3}$$

$L_{support}$ contact length of support parallel to the grain
L_r length of reinforcement piece
h_r height of reinforcement piece

$$k_{pos} = \begin{cases} 1 & \text{for end support} \\ 2 & \text{for centre support} \end{cases} \tag{D.4}$$

See Figure D1 or Figure D2 for parameters b_w, L_r, $L_{support}$ and h_r.

3.3 Glue line shear capacity

The resistance of the glue line based on the stress at the effective area of gluing

$$R_{gl,k} = n \cdot f_{v,90,flat,k} \cdot A_{ef,gl} \tag{D.5}$$

where the following symbols have been used:

These design instructions are the property of Metsäliitto Cooperative, Metsä Wood. The instructions have been prepared in co-operation with VTT.

$A_{ef,gl}$ effective gluing area

$$A_{ef,gl} = \min\left(\begin{array}{l} \dfrac{k_{pos} \cdot h_r^{\,2}}{2} + L_{support} \cdot h_r \\ L_r \cdot h_r - \dfrac{k_{pos}}{2} \cdot \left[\min\left(h_r ; \dfrac{L_r - L_{support}}{k_{pos}}\right)\right]^2 \end{array}\right) \tag{D.6}$$

$$k_{pos} = \begin{cases} 1 & \text{for end support} \\ 2 & \text{for centre support} \end{cases} \tag{D.7}$$

h_r height of reinforcement piece
$L_{support}$ contact length of support parallel to the grain
L_r length of reinforcement piece

The design value of the load-carrying capacity for the glue line $R_{gl,d}$ is compared against the compression force perpendicular to the grain $F_{gl,d}$ for loading that is linearly distributed to the reinforcement pieces:

$$F_{gl,d} = \frac{n \cdot b_r}{b_w + n \cdot b_r} \cdot F_{c,90,d} \tag{D.8}$$

where the following symbols have been used:

$F_{c,90,d}$ design support force
b_r width of reinforcement piece but not more than 51 mm
b_w width of web
n amount of reinforcement pieces

See Figure D1 or Figure D2 for parameters n, $L_{support}$, L_r, b_w, b_r and h_r.

3.4 Web buckling capacity

The buckling resistance of the web

$$R_{c,k} = 1.2 \cdot k_c \cdot f_{c,90,web,k} \cdot b_w \cdot L_{b,w} \tag{D.9}$$

where the following symbols have been used:

k_c reduction factor due to buckling according to EN 1995-1-1 equation (6.27)
b_w width of web
$L_{b,w}$ buckling depth of the web

$$L_{b,w} = \min(L_{b,l,w}; 600\,\text{mm}) + \min(L_{b,r,w}; 600\,\text{mm}) \tag{D.10}$$

These design instructions are the property of Metsäliitto Cooperative, Metsä Wood. The instructions have been prepared in co-operation with VTT.

$L_{b,l,w}$ buckling depth at the left side of the support centre line
$L_{b,r,w}$ buckling depth at the right side of the support centre line

$$\lambda = \frac{\sqrt{12} \cdot L_c}{b_w} \tag{D.11}$$

b_w width of web
L_c buckling length of the web

For Kerto-Ripa cross-section with structurally glued top panel

$$L_c = 0.85 \cdot \left(h_w - \begin{cases} h_r \text{ if } n = 2 \\ 0 \text{ if } n < 2 \end{cases} \right) \tag{D.12a}$$

n amount of reinforcement pieces
h_w height of web
h_r height of reinforcement piece

For Kerto-Ripa cross-section with structurally glued bottom panel but no structurally glued top panel

$$L_c = \begin{cases} 0.85 \cdot h_w \text{ if } n = 2 \\ h_w \text{ if } n < 2 \end{cases} \tag{D.12b}$$

For all other Kerto-Ripa cross-section

$$L_c = h_w \tag{D.12c}$$

See Figure D3 or Figure D4 for parameters n, $L_{b,w}$, h_r, h_w, b_w and L_c.

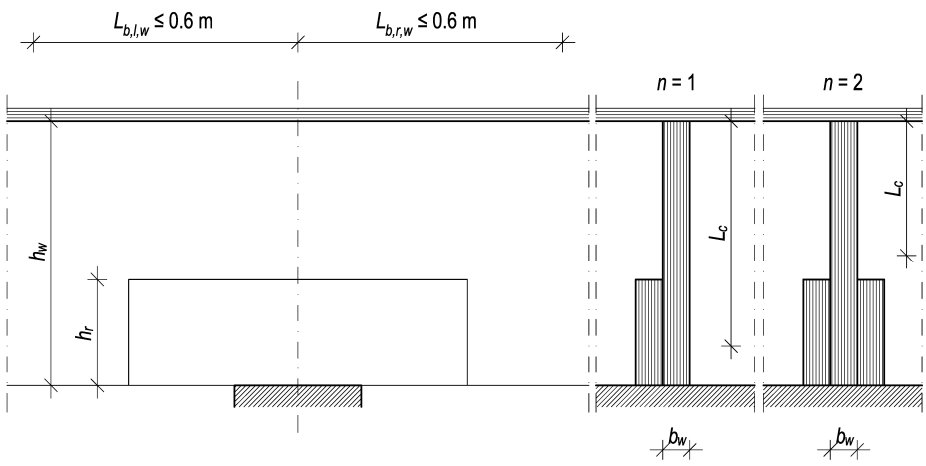

Figure D3. Parameters for buckling design of Kerto-Ripa element with structurally glued top panel at centre support

These design instructions are the property of Metsäliitto Cooperative, Metsä Wood. The instructions have been prepared in co-operation with VTT.

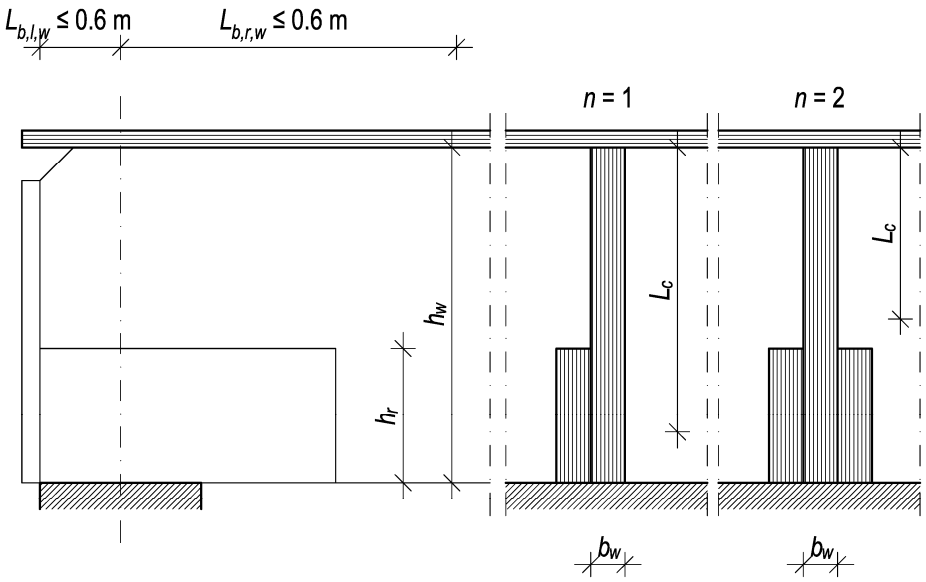

Figure D4. Parameters for buckling design of Kerto-Ripa with structurally glued top panel at end support

4 Structural detailing

4.1 Blockings

There shall always be at least one crosswise blocking line near the centre line of the support. Blockings shall be at least 45 mm thick Kerto-S and be positioned not more than 100 mm away from the centre of support. Blocking piece shall not be more than 50 mm away from the top of the web and its height shall be at least 0.4x the height of the web. Blocking shall be connected to the webs with nailing or screwing. The fasteners shall be positioned with maximum of 100 mm spacing.

See Figure D5 or Figure D6 for positioning and fastening detail. The figures also include an area where the blockings shall be positioned. Blockings may be higher than the presented minimum height and they may be closer to the centre line of the support.

These design instructions are the property of Metsäliitto Cooperative, Metsä Wood. The instructions have been prepared in co-operation with VTT.

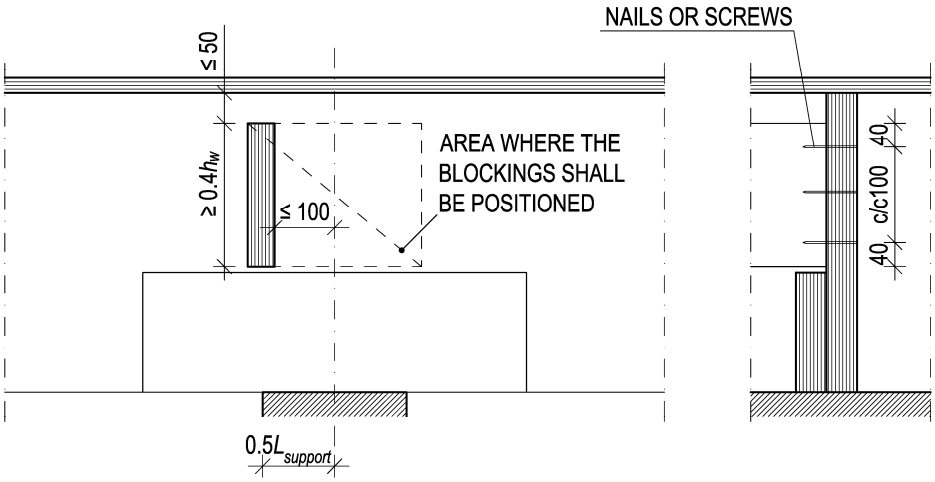

Figure D5. Positioning and fastening the crosswise blocking at centre support

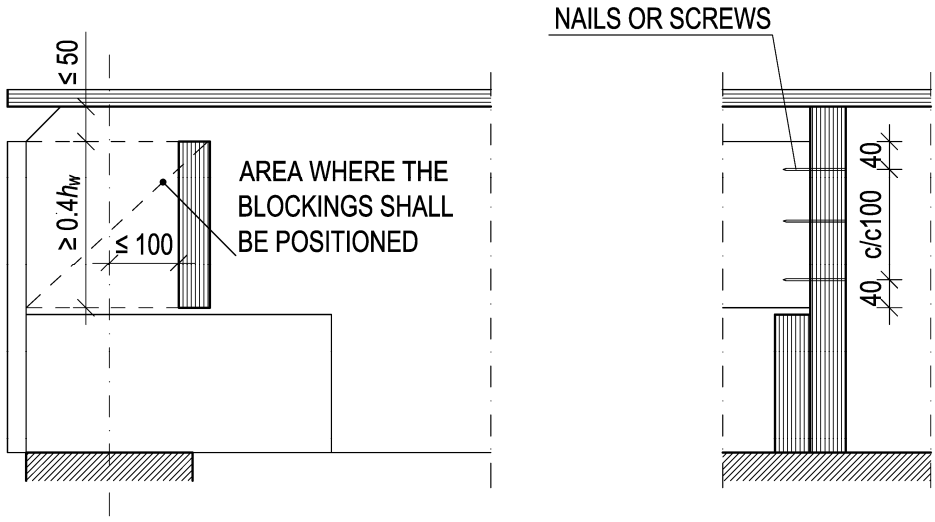

Figure D6. Positioning and fastening the crosswise blocking at end support

4.2 Reinforcement piece

Reinforcement pieces shall be Kerto-S and they may be single or double sided. Reinforcement pieces do not need to be sanded. If double sided reinforcement is used, the pieces shall be same size and thickness. The centre support reinforcement pieces shall be positioned centrally to the centre line of the support. The maximum thickness of reinforcement piece is 51 mm.

These design instructions are the property of Metsäliitto Cooperative, Metsä Wood. The instructions have been prepared in co-operation with VTT.

If structure has a bottom panel, there shall not be glue between reinforcement piece and bottom panel. The glue shall be spread out to the total area of the reinforcement piece. To gain enough compression for the glue the reinforcement piece shall be nailed or screwed to beam with the amount that equals c/c 100 mm evenly spread.

5 Design example

A design example of calculating the compression perpendicular to the grain capacity with the following design parameters is presented below:

- Double span Kerto-Ripa roof element with 12.5 m + 12.5 m spans.
- Centre support is investigated, support has 240 mm contact length
- Design value for support reaction $F_{c,90,d}$ = 98 kN.
- Web size is 57 mm x 600 mm L = 25 m Kerto-S
- Bottom panel is structurally glued Kerto-Q and top panel is spruce plywood
- Reinforcement pieces 2x 39 mm x 200 mm L = 450 mm Kerto-S

1. Ribbed and thin slab capacity

The resistance of ribs <u>without</u> reinforcement pieces:

$k_{c,90}$ = 1.1, uniform loads, Kerto-S edgewise, $L_{support}$ > 125 mm.

$f_{c,90,web,k}$ = 6.0 N/mm^2

b_w = 57 mm, width of the web

$L_{support}$ = 240 mm, support actual contact length

$L_{ef,support} = L_{support} + 2 \cdot 15$ mm = 270 mm

$$R_{c,90,k} = k_{c,90} \cdot f_{c,90,web,k} \cdot b_w \cdot L_{ef,support} = 1.1 \cdot 6.0 \text{ N/mm}^2 \cdot 57 \text{ mm} \cdot 270 \text{ mm}$$
$$= 101.57 \text{ kN}$$

2. Reinforced compression capacity

The resistance of ribs <u>with</u> reinforcement pieces:

$k_{c,90}$ = 1.0

$f_{c,90,web,k}$ = 6.0 N/mm^2

b_w = 57 mm, width of the web

n = 2, double sided reinforcement pieces

These design instructions are the property of Metsäliitto Cooperative, Metsä Wood. The instructions have been prepared in co-operation with VTT.

b_r = 39 mm, width of the reinforcement piece

$L_{support}$ = 240 mm, support actual contact length

$L_{ef,support} = L_{support} + 2 \cdot 15$ mm = 270 mm

$$R_{c,90,re,k} = k_{c,90} \cdot f_{c,90,web,k} \cdot (b_w + 0.7 \cdot n \cdot b_r) \cdot L_{ef,support} = 1.0 \cdot 6.0 \text{ N/mm}^2 \cdot (57 \text{ mm} + 0.7 \cdot 2 \cdot 39 \text{ mm}) \cdot 270 \text{ mm} = 180.79 \text{ kN}$$

3. Top level of reinforcement compression capacity

$f_{c,90,web,k}$ = 6.0 N/mm^2

b_w = 57 mm, width of the web

L_r = 450 mm, length of the reinforcement piece

$L_{support}$ = 240 mm, support actual contact length

h_r = 200 mm, height of the reinforcement piece

$$k_{pos} = \begin{cases} 1 & \text{for end support} \\ 2 & \text{for centre support} \end{cases} = 2$$

$$L_{ef,top} = \min(L_r, L_{support} + k_{pos} \cdot h_r) = \min(450 \text{ mm}, 240 \text{ mm} + 2 \cdot 200 \text{ mm}) = 450 \text{ mm}$$

$$R_{c,90,top,k} = f_{c,90,edge,k} \cdot b_w \cdot L_{ef,top} = 6.0 \text{ N/mm}^2 \cdot 57 \text{ mm} \cdot 450 \text{ mm} = 153.90 \text{ kN}$$

4. Glue line shear capacity

$$k_{pos} = \begin{cases} 1 & \text{for end support} \\ 2 & \text{for centre support} \end{cases} = 2$$

h_r = 200 mm, height of the reinforcement piece

$L_{support}$ = 240 mm, support actual contact length

L_r = 450 mm, length of the reinforcement piece

$f_{v,90,flat,k}$ = 0.6 N/mm^2

These design instructions are the property of Metsäliitto Cooperative, Metsä Wood. The instructions have been prepared in co-operation with VTT.

$$A_{ef,gl} = \min\begin{pmatrix} \dfrac{k_{pos} \cdot h_r^{\,2}}{2} + L_{support} \cdot h_r \\ L_r \cdot h_r - \dfrac{k_{pos}}{2} \cdot \left[\min\left(h_r ; \dfrac{L_r - L_{support}}{k_{pos}} \right) \right]^2 \end{pmatrix}$$

$$= \min\begin{pmatrix} 88000\,\text{mm}^2 \\ 78975\,\text{mm}^2 \end{pmatrix} = 78975\,\text{mm}^2$$

$$R_{gl,k} = n \cdot f_{v,90,flat,k} \cdot A_{ef,gl} = 2 \cdot 0.6\ \text{N/mm}^2 \cdot 78975\ \text{mm}^2 = 94.77\ \text{kN}$$

5. Web buckling capacity

$L_{b,l,w}$ = 600 mm, buckling depth at the left side of the support centre line

$L_{b,l,w}$ = 600 mm, buckling depth at the right side of the support centre line

$$L_{b,w} = \min(L_{b,l,w}; 600\,\text{mm}) + \min(L_{b,r,w}; 600\,\text{mm}) = 1200\ \text{mm}$$

n = 2, double sided reinforcement pieces

h_w = 600 mm, height of the web

Kerto-Ripa cross-section with structurally glued bottom panel but no structurally glued top panel:

$$L_c = \begin{cases} 0.85 \cdot h_w \text{ if } n = 2 \\ h_w \text{ if } n < 2 \end{cases} = 510\ \text{mm}$$

b_w = 57 mm, width of the web

$$\lambda = \frac{\sqrt{12} \cdot L_c}{b_w} = 30.99$$

β_c = 0.1 (for LVL in equation (6.29) of EN 1995-1-1)

$f_{c,90,web,k}$ = 6.0 N/mm^2

$E_{90,web,k}$ = 350 N/mm^2

$$\lambda_{rel,y} = \frac{\lambda}{\pi}\sqrt{\frac{f_{c,90,web,k}}{E_{90,web,k}}} = 1.29 \geq 0.3 \text{ (equation (6.21) of EN 1995-1-1)}$$

These design instructions are the property of Metsäliitto Cooperative, Metsä Wood. The instructions have been prepared in co-operation with VTT.

$k_y = 0.5 \cdot \left[1 + \beta_c \cdot \left(\lambda_{rel,y} - 0.3\right) + \lambda_{rel,y}{}^2\right]$ = 1.38, (equation (6.27) of EN 1995-1-1)

$k_c = \dfrac{1}{k_y + \sqrt{k_y{}^2 - \lambda_{rel,y}{}^2}}$ = 0.53, (equation (6.26) of EN 1995-1-1)

$R_{c,k} = 1.2 \cdot k_c \cdot f_{c,90,web,k} \cdot b_w \cdot L_{b,w}$ = 1.2 · 0.53 · 6.0 N/mm^2 · 57 mm · 1200 mm = 261.10 kN

6. Design conditions

Design value for support reaction at the centre support $F_{c,90,d}$ = 98 kN

$$F_d \le R_d = k_{\text{mod}} \frac{R_k}{\gamma_M}$$

k_{mod} = 0.8 (for LVL in Table 3.1 of EN 1995-1-1)

γ_M = partial safety factor for LVL according to the National Annex of EN 1995-1-1, In Finland γ_M = 1.2

7. Check of design conditions

1. Ribbed and thin slab capacity, no reinforcement
   $F_d = 98kN \le R_{c,90,d} = \dfrac{0.8}{1.2} \cdot 101.57 \text{ kN} = 67.7 \text{ kN}$
2. Reinforced compression capacity
   $F_d = 98kN \le R_{c,90,re,d} = \dfrac{0.8}{1.2} \cdot 180.79 \text{ kN} = 120.5\text{kN}$
3. Top level of reinforcement compression capacity
   $F_d = 98kN \le R_{c,90,top,d} = \dfrac{0.8}{1.2} \cdot 153.90 \text{ kN} = 102.6 \text{ kN}$
4. Glue line shear capacity
   $F_d = \left(\dfrac{n \cdot b_r}{b_w + n \cdot b_r}\right) \cdot 98kN = 56.6 \text{ kN} \le R_{c,90,top,d} = \dfrac{0.8}{1.2} \cdot 94.77 \text{ kN} = 63.2 \text{ kN}$
5. Web buckling capacity
   $F_d = 98kN \le R_{c,d} = \dfrac{0.8}{1.2} \cdot 261.10 \text{ kN} = 174.0 \text{ kN}$

The support capacity is not high enough without reinforcements 1. The reinforcement has high enough capacity to transfer the loads 2-5.

These design instructions are the property of Metsäliitto Cooperative, Metsä Wood. The instructions have been prepared in co-operation with VTT.